Circuit Analysis
EE2101

Week 10-Sinusoids and Phasors
Dr YAN Yamin

Lecture notes adapted from Dr Soh Cheong Boon

Overview

- Motivation
- Sinusoids
- Phasors
- Phasor Relationships for Circuit Elements
- Impedance and Admittance
- Kirchhoff's Laws in the Frequency Domain
- Impedance Combinations

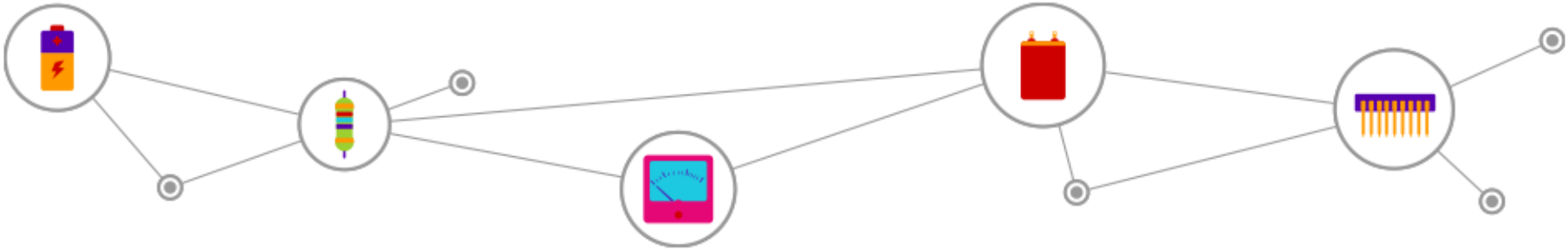

By the end of this lesson, you should be able to…

- Describe the key characteristics of sinusoids.
- Describe the key characteristics of phasors.
- Explain the relationship of phasors with circuit elements.
- Explain the impedance and admittance of circuit elements.
- Explain how Kirchhoff's laws can be applied to AC circuit analysis.
- Explain the impedance combinations that can be applied to AC circuit analysis.

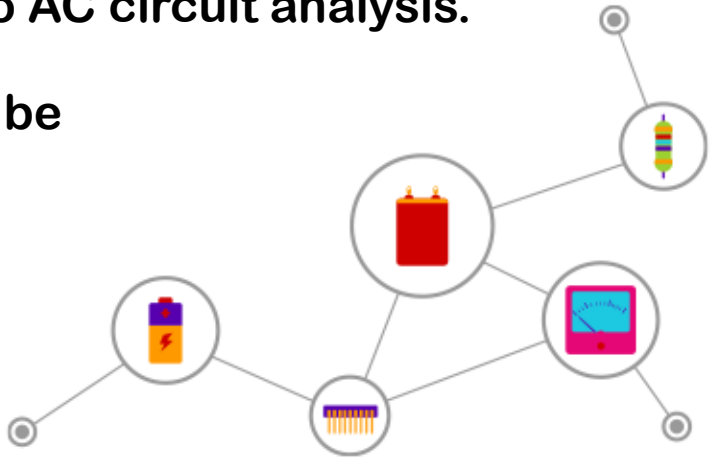

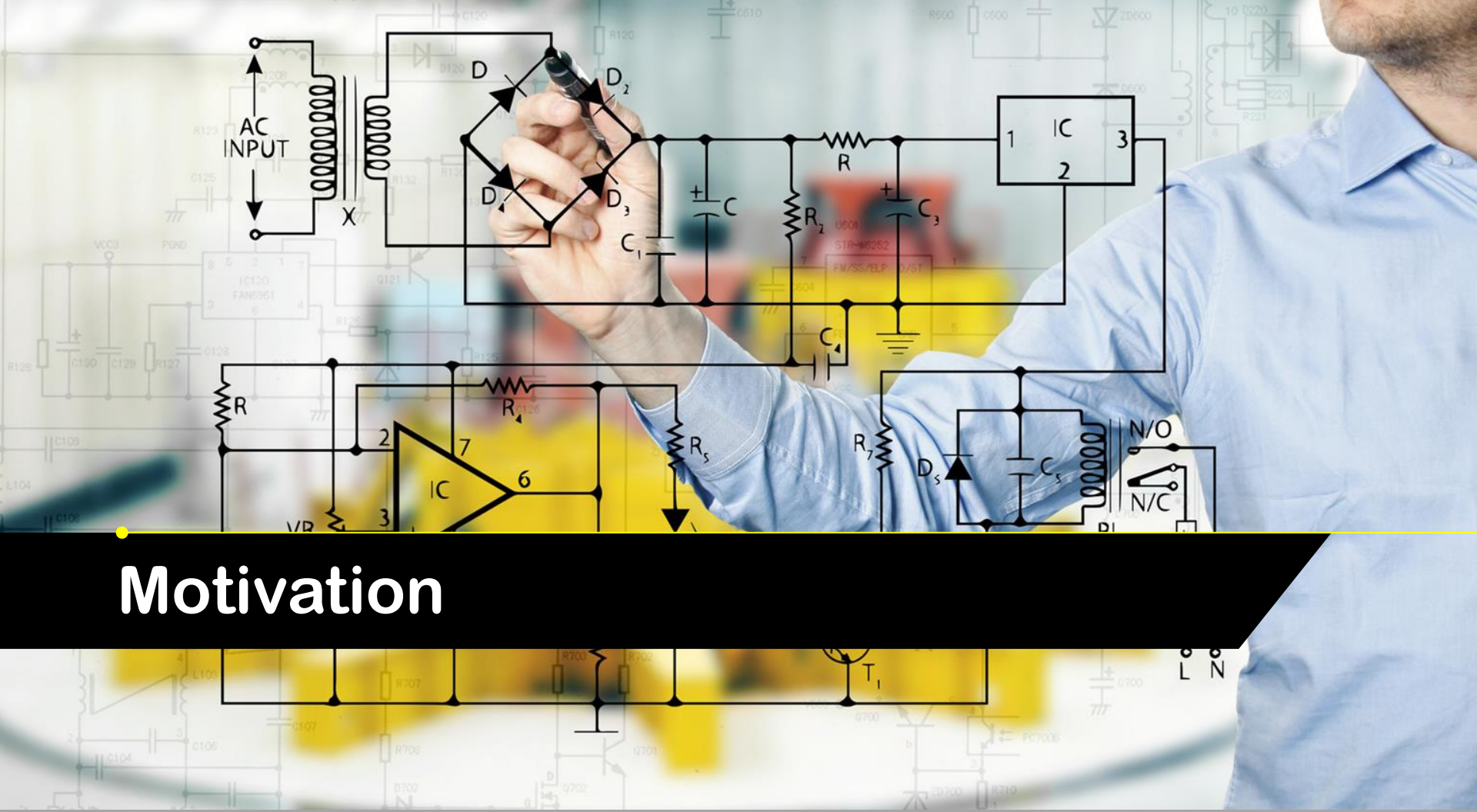
AC
INPUT
X
D
D2
D4
D3
C1
C
R2
R
C3
IC
1
2
3
C4
R
R4
2
7
IC
6
3
R5
R7
D5
C5
N/O
N/C
T1
L
N

Motivation

Motivation

So far, the analysis has been limited to mostly DC circuits. The source is a constant or time-invariant.

Historically, DC sources were the main means of providing electric power up till late 1800s.

Then, AC systems became predominant because AC is more efficient and economical to transmit over long distances.

AC
INPUT
X
D
D2
D4
D3
C1
C
R2
R
C3
IC
1
2
3
C4
R
R4
2
7
IC
6
3
R5
R7
D5
C5
N/O
N/C
T1
L
N

Sinusoids

Sinusoids

A sinusoid is a signal that has the form of the sine or cosine function.

E.g. $v(t) = V_m \sin \omega t, \quad i(t) = I_m \cos(\omega t + \phi)$

A sinusoidal current is usually referred to as **Alternating Current (AC)**.

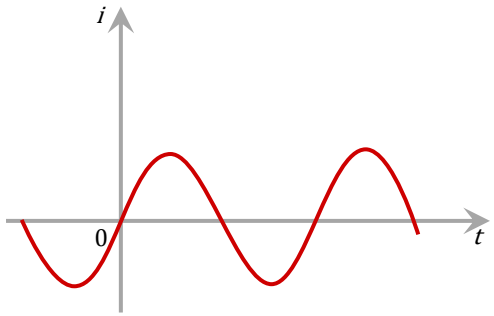

The current reverses at regular time intervals and has alternately positive and negative values.

Circuits that are driven by sinusoidal currents or voltage sources are called **AC circuits**.

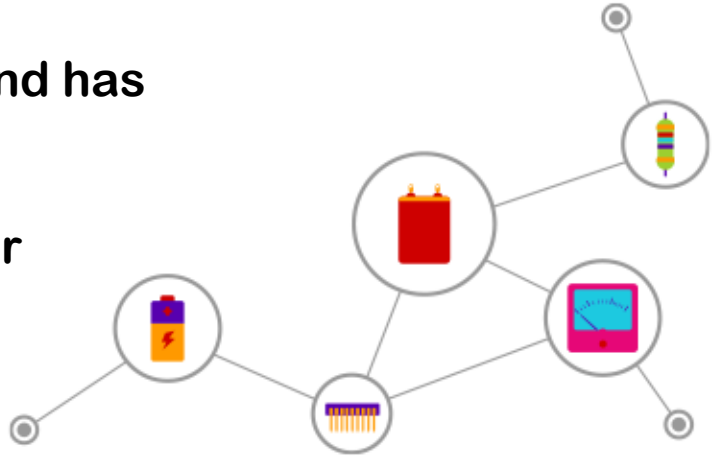

Sinusoids

How can we apply what we have learned before to determine $i(t)$ and $v(t)$ if $v_s(t)$ is as shown?

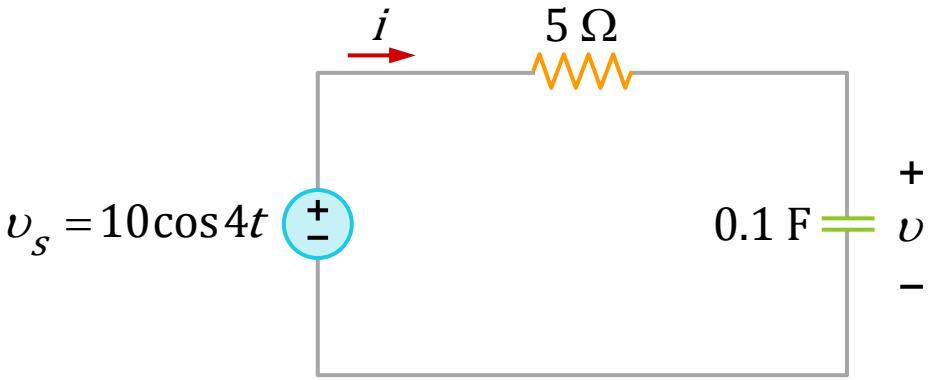

Sinusoids

Consider the sinusoidal voltage $v(t) = V_m \sin(\omega t)$

Where,

V_m = the amplitude of the sinusoid

ω = the angular frequency in radians/s

ωt = the argument of the sinusoid

A general expression for a sinusoid is $v(t) = V_m \sin(\omega t + \phi)$

Where, ϕ = phase in deg or rad

Sinusoids

Plot of $v(t) = V_m \sin(\omega t)$

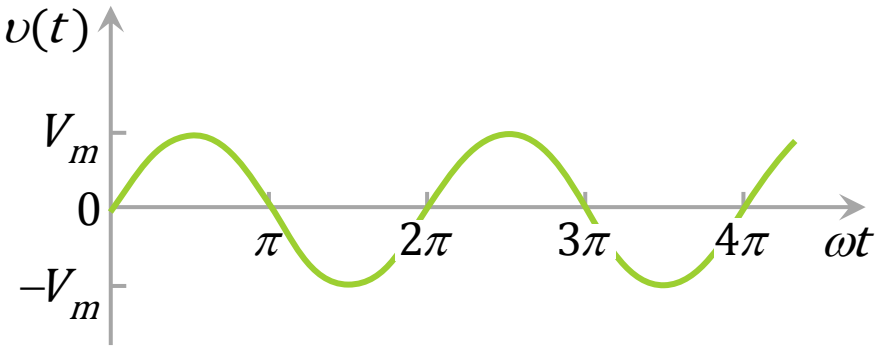

(a)

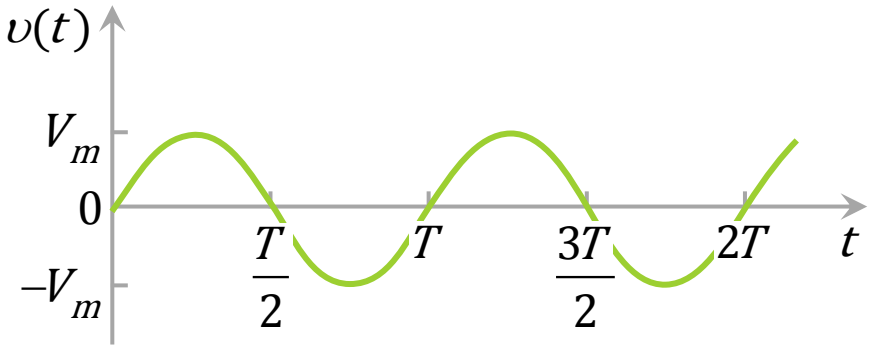

(b)

$$\omega t\Big|_{t=T} = 2\pi \quad \Rightarrow \quad T = \frac{2\pi}{\omega}$$

Sinusoids

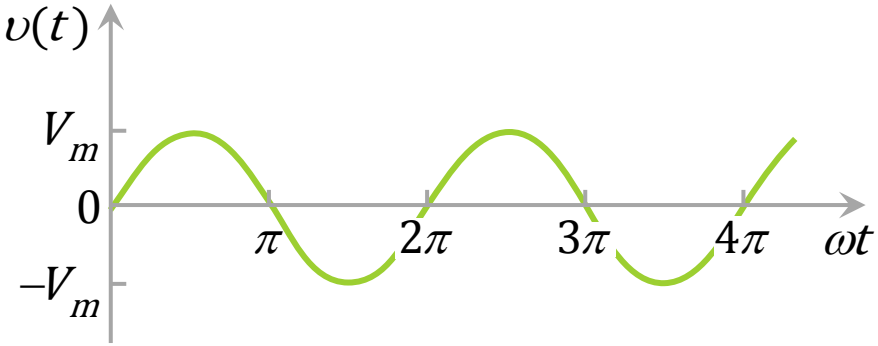

(a)

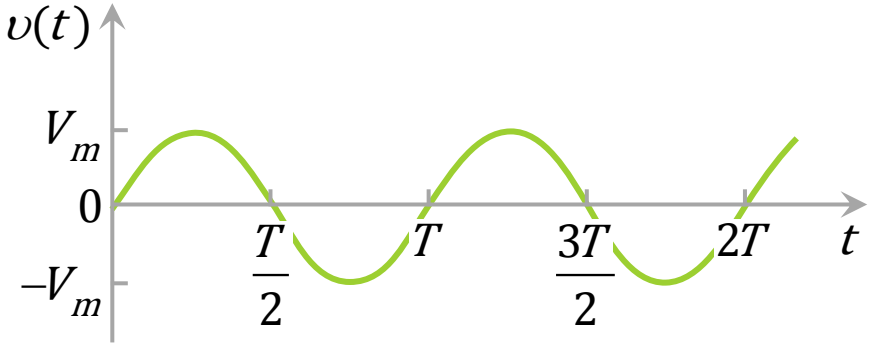

(b)

- T is called the period of the sinusoid in seconds.
- $v(t)$ is a periodic signal ($v(t) = v(t + nT)$, for all t and for all integers n).
- The period T is the number of seconds per cycle.

Sinusoids

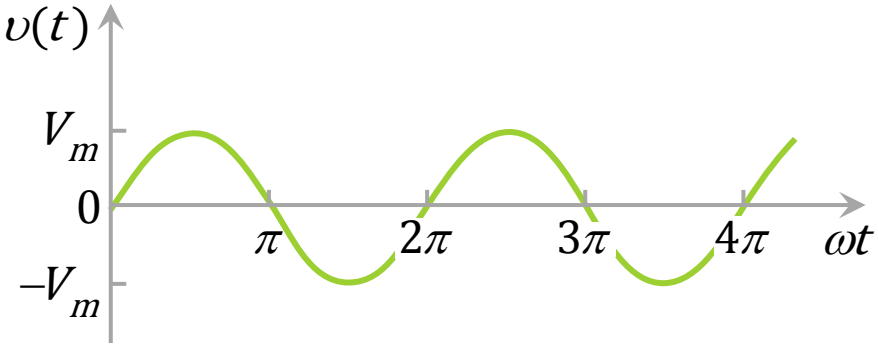

(a)

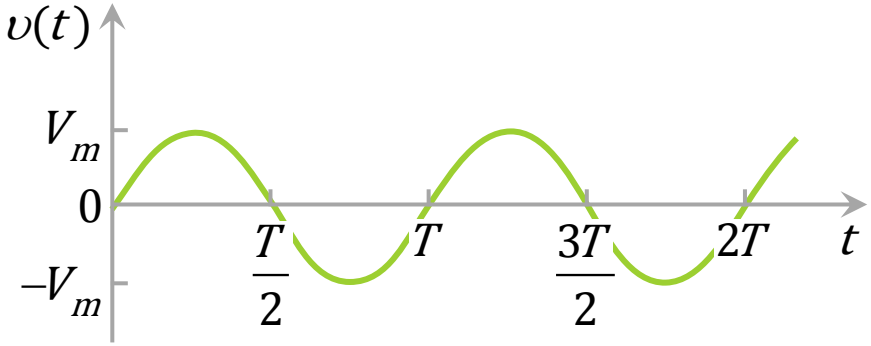

(b)

- The frequency $f = \frac{1}{T}$ in hertz (Hz) is the number of cycles per second.
- Hence, $\omega = 2\pi f$ in radians per second (rad/s).

Sinusoids

Consider two sinusoids, $v_1(t) = V_m \sin \omega t$ $v_2(t) = V_m \sin(\omega t + \phi)$

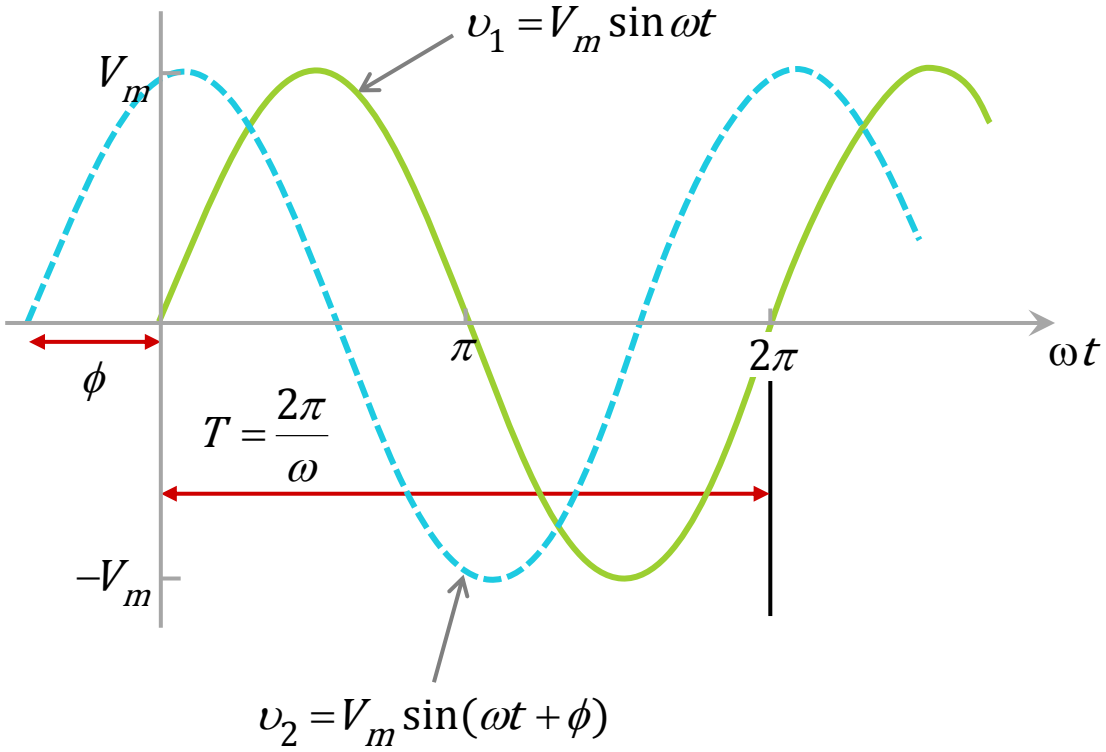

Sinusoids

The starting point of $v_2(t)$ occurs first.

$v_2(t)$ leads $v_1(t)$ by ϕ

$v_1(t)$ lags $v_2(t)$ by ϕ

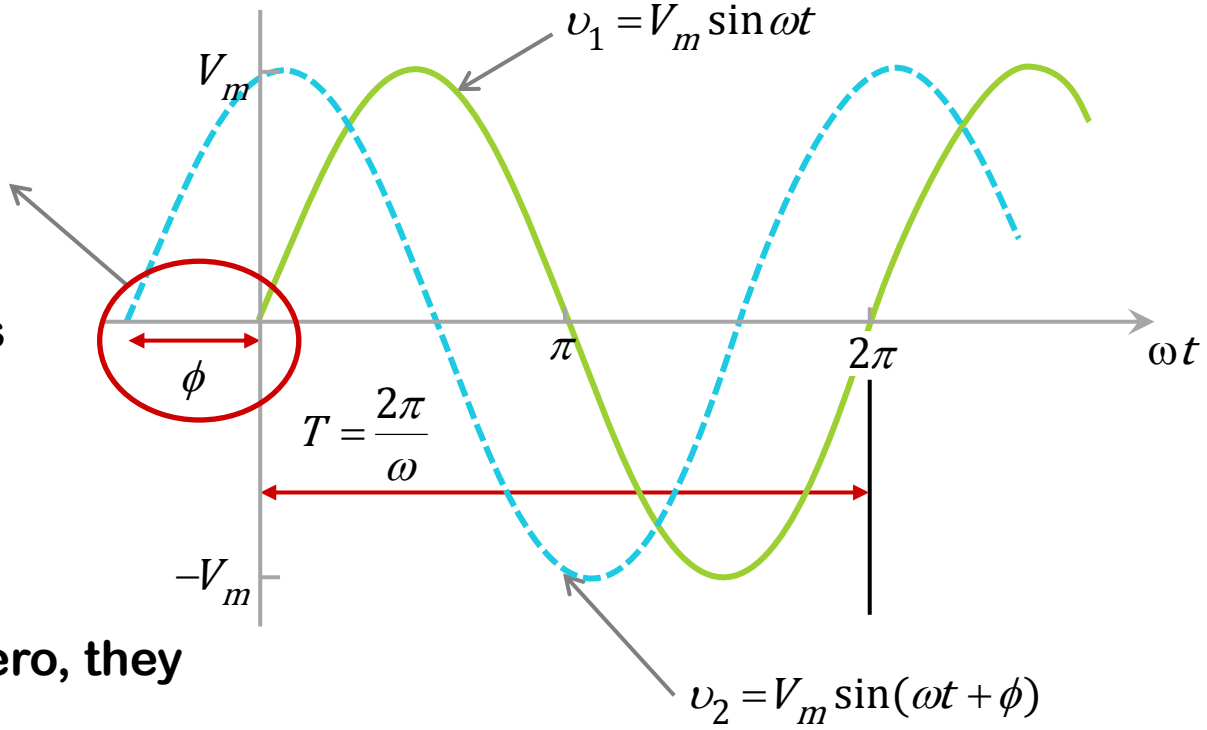

Only two sinusoidal values with the same frequency can be compared by their amplitude and phase difference.

If phase difference ϕ is zero, they are in phase.

If phase difference is not zero, they are out of phase.

Sinusoids

When comparing two sinusoids, it is expedient to express both as either sine or cosine functions with positive amplitudes.

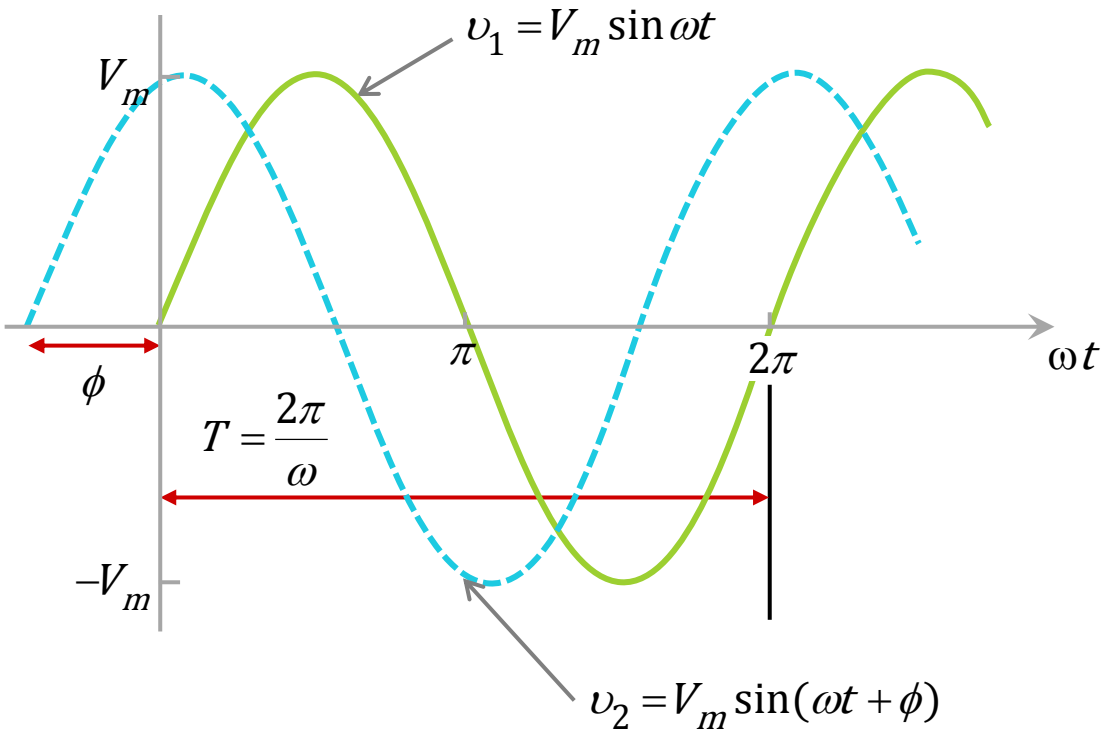

Sinusoids

Using the following trigonometric identities, we can transform a sinusoid from sine form to cosine form or vice versa.

Trigonometric Identities
$\sin(A \pm B) = \sin A \cos B \pm \cos A \sin B$
$\cos(A \pm B) = \cos A \cos B \mp \sin A \sin B$
$\sin(\omega t \pm 180^0) = -\sin \omega t$
$\cos(\omega t \pm 180^0) = -\cos \omega t$
$\sin(\omega t \pm 90^0) = \pm \cos \omega t$
$\cos(\omega t \pm 90^0) = \mp \sin \omega t$

Remember

$$\cos \omega t = \sin(\omega t + 90^0)$$

$$\sin \omega t = \cos(\omega t - 90^0)$$

Sinusoids: Example 1

Given a sinusoid, $5\sin(4\pi t - 60^o)$, calculate its amplitude, phase, angular frequency, period and frequency.

Amplitude

5

Phase

-60°

Angular Frequency

4π rad/s

Period

$$T = \frac{2\pi}{\omega} \rightarrow T = \frac{2\pi}{4\pi} \rightarrow T = 0.5\ s$$

Frequency

$$f = \frac{1}{T} \rightarrow f = \frac{1}{0.5} \rightarrow f = 2\ \text{Hz}$$

Sinusoids: Example 2

Calculate the phase angle between $v_1(t) = -10\cos(\omega t + 50^o)$ and $v_2(t) = 12\sin(\omega t - 10^o)$. State which sinusoid is leading.

Sinusoids: Example 2

$$\cos(\omega t \pm 180^0) = -\cos\omega t$$

$$v_1(t) = -10\cos(\omega t + 50^o)$$

$$v_1(t) = 10\cos(\omega t + 50^o - 180^o)$$

$$v_1(t) = 10\cos(\omega t - 130^o)$$

$$v_1(t) = 10\cos(\omega t + 230^o)$$

$$\sin\omega t = \cos(\omega t - 90^0)$$

$$v_2(t) = 12\sin(\omega t - 10^o)$$

$$v_2(t) = 12\cos(\omega t - 10^o - 90^o)$$

$$v_2(t) = 12\cos(\omega t - 100^o)$$

$$v_2(t) = 12\cos(\omega t + 260^o)$$

Sinusoids: Example 2

$$v_1(t) = 10\cos(\omega t + 230^o)$$

$$v_2(t) = 12\cos(\omega t + 260^o)$$

$v_2(t)$ **leads** $v_1(t)$ **by** 30°

AC
INPUT
X
D
D2
D4
D3
C1
C
R2
R
C3
IC
1
2
3
C4
R
R4
2
7
IC
6
3
R5
R7
D5
C5
N/O
N/C
T1
L
N

Phasors

Phasors

Sinusoids are easily expressed in terms of phasors. Phasors are more convenient to work with than sine and cosine functions.

A phasor is a complex number that represents the amplitude and phase of a sinusoid.

Charles Steinmetz introduced phasors to analyse and solve AC circuits in 1893.

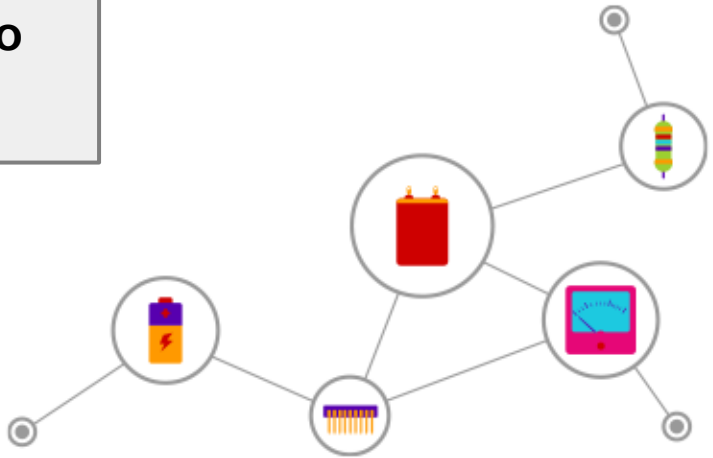

Phasors: Review of Complex Numbers

A complex number can be represented in one of the following three forms:

Rectangular

$$z = x + jy, \quad j = \sqrt{-1}$$

$$z = r(\cos\phi + j\sin\phi)$$

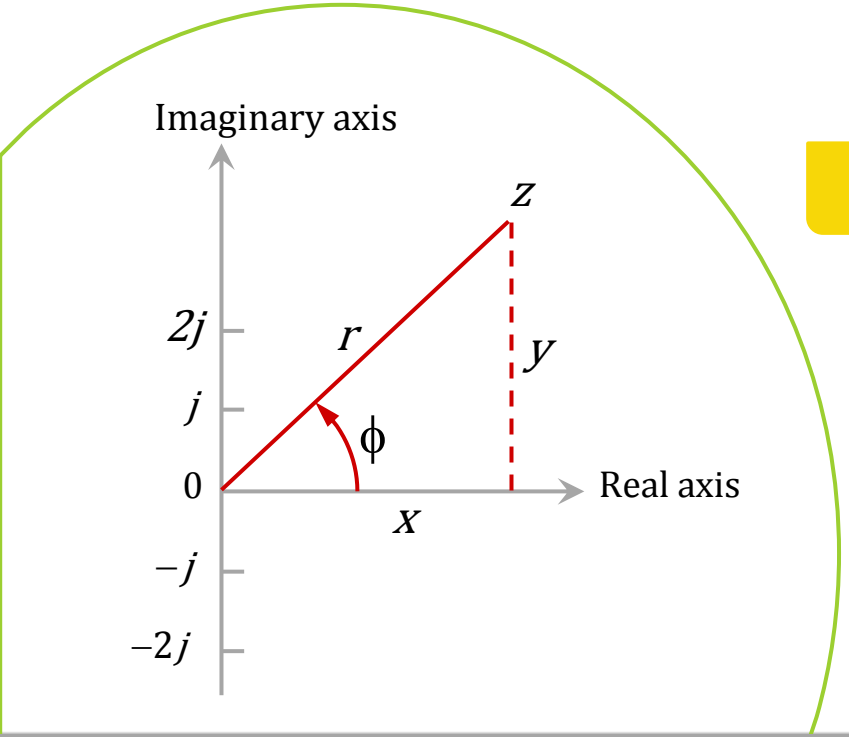

Polar

$$z = r\angle\phi$$

Exponential

$$z = re^{j\phi}$$

Where, $r = \sqrt{x^2 + y^2}$

$$\phi = \tan^{-1}\left(\frac{y}{x}\right)$$

Phasors: Review of Complex Numbers

Given the complex numbers

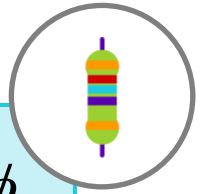

$$z = x + jy = r\angle\phi$$

$$z_1 = x_1 + jy_1 = r_1\angle\phi_1$$

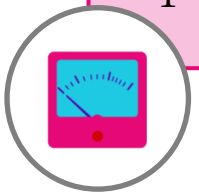

$$z_2 = x_2 + jy_2 = r_2\angle\phi_2$$

Phasors: Review of Complex Numbers

Mathematical Operations of Complex Numbers	
Addition	$z_1 + z_2 = (x_1 + x_2) + j(y_1 + y_2)$
Subtraction	$z_1 - z_2 = (x_1 - x_2) + j(y_1 - y_2)$
Multiplication	$z_1 z_2 = r_1 r_2 \angle \phi_1 + \phi_2$
Division	$\frac{z_1}{z_2} = \frac{r_1}{r_2} \angle \phi_1 - \phi_2$
Reciprocal	$\frac{1}{z} = \frac{1}{r} \angle -\phi$
Square Root	$\sqrt{z} = \sqrt{r} \angle \phi / 2$
Complex Conjugate	$z^* = x - jy = r \angle -\phi = re^{-j\phi}$
Euler's Identity	$e^{\pm j\phi} = \cos\phi \pm j \sin\phi$

Phasors: Background of Phasor Representation

The idea is based on Euler's identity.

$$e^{\pm j\phi} = \cos\phi \pm j\sin\phi$$

$$\cos\phi = \mathrm{Re}(e^{j\phi})$$

$$\sin\phi = \mathrm{Im}(e^{j\phi})$$

Phasors: Background of Phasor Representation

Given a sinusoid

$$v(t) = V_m \cos(\omega t + \phi) = \mathrm{Re}(V_m e^{j(\omega t + \phi)})$$

Or

$$v(t) = \mathrm{Re}(V_m e^{j\phi} e^{j\omega t})$$

Thus,

$$v(t) = \mathrm{Re}(\mathbf{V} e^{j\omega t})$$

Where, $\mathbf{V} = V_m e^{j\phi} = V_m \angle \phi$

$\mathbf{V} = V_m \angle \phi$ is the **phasor representation** of the sinusoid $v(t)$.

Phasors

A phasor is a complex representation of the amplitude and phase of a sinusoid.

A graphical interpretation of the following equations is shown on the next slide.

$$v(t) = \mathrm{Re}(\mathbf{V}e^{j\omega t})$$

$$\mathbf{V} = V_m e^{j\phi} = V_m \angle \phi$$

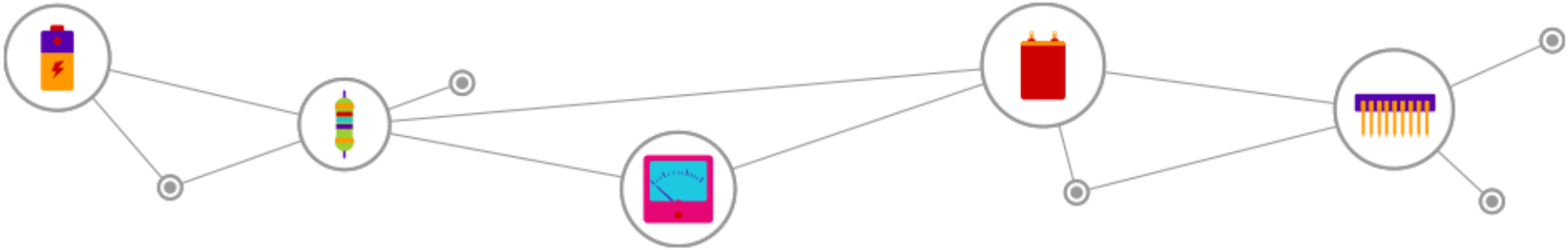

Phasors

Plot the sinor $\mathbf{V}e^{j\omega t} = V_m e^{j(\omega t+\phi)}$ on the complex plane.

As time increases, the sinor rotates on a circle of radius V_m in a counterclockwise direction at an angular velocity ω.

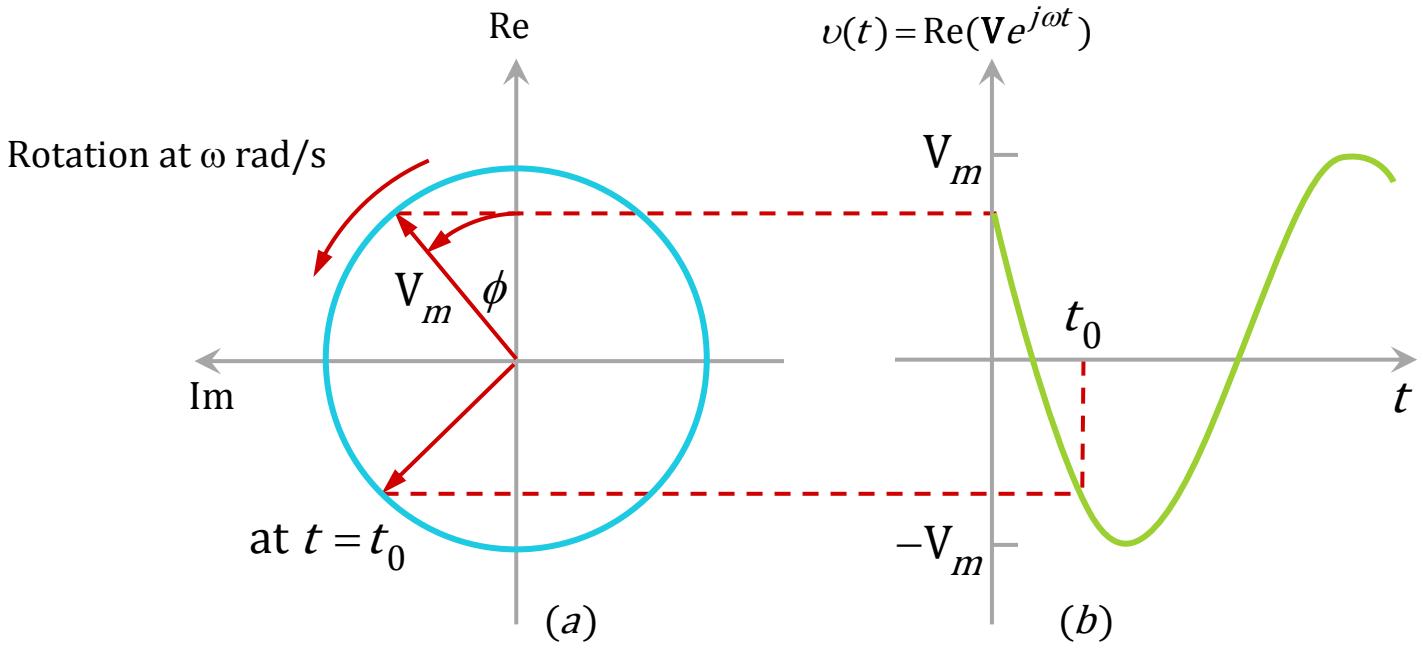

Phasors

We may regard $v(t)$ as the projection of the sinor $\mathbf{V}e^{j\omega t}$ on the real axis, as shown in (b).

The sinor may be regarded as a rotating phasor.

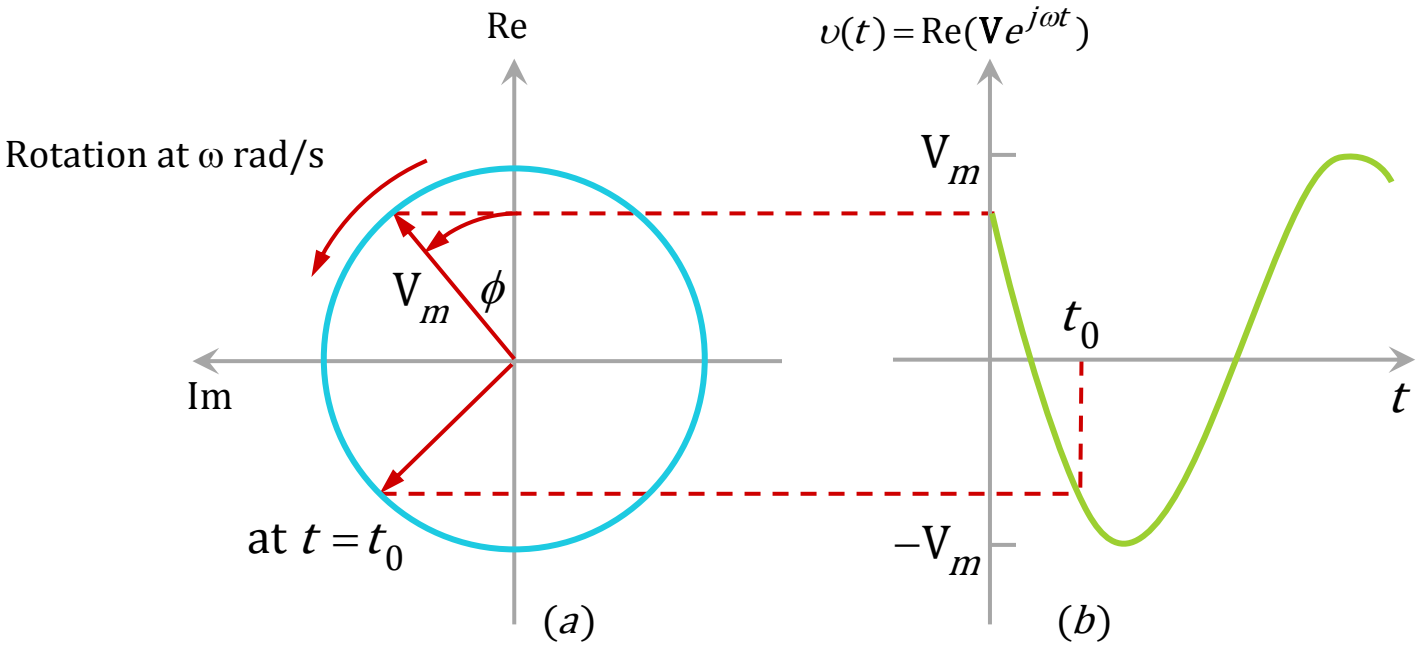

Phasors: Graphical Representation of Phasors

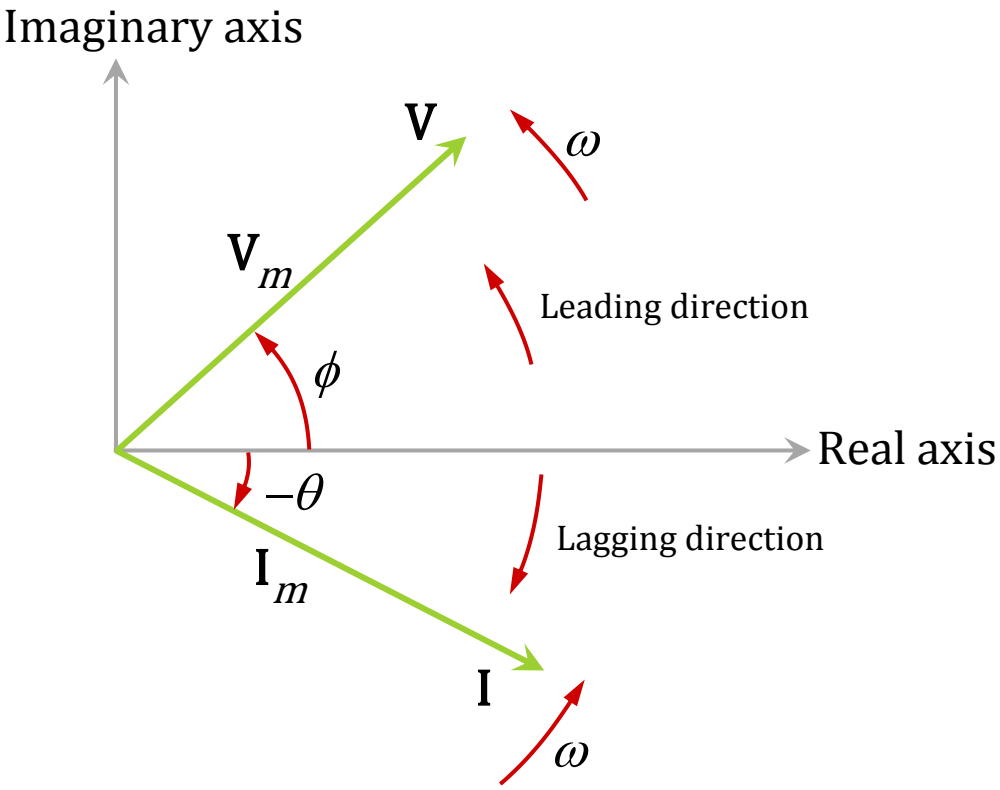

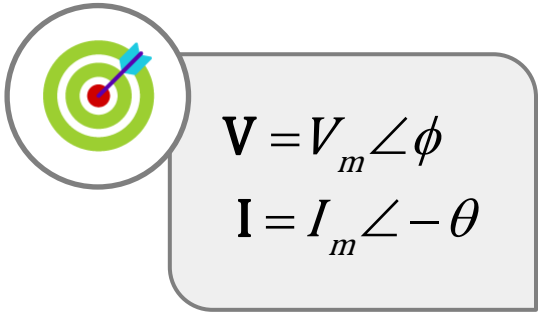

$$\mathbf{V} = V_m \angle \phi$$

$$\mathbf{I} = I_m \angle -\theta$$

Phasors: Sinusoid-Phasor Transformation

Transform a sinusoid to and from the time domain to the phasor domain:

$$v(t) = V_m \cos(\omega t + \phi) \quad \Longleftrightarrow \quad \mathbf{V} = V_m \angle \phi$$

Time Domain **Phasor Domain**

Amplitude and **phase difference** are two principal concerns in the study of voltage and current sinusoids.

Starting with the cosine form for each source, each response is also a cosine of the same frequency. To preserve this association, if the sinusoidal source is in the form of a sine function, it can be changed to a cosine function using

$$\boxed{\sin \omega t = \cos(\omega t - 90^0)}$$

Phasors: Sinusoid-Phasor Transformation

Expressing information in alternate domains is fundamental to all areas of engineering.

Time Domain Representation	Phasor Domain Representation
$V_m \cos(\omega t + \phi)$	$V_m \angle \phi$
$V_m \sin(\omega t + \phi)$	$V_m \angle(\phi - 90^o)$
$I_m \cos(\omega t + \theta)$	$I_m \angle \theta$
$I_m \sin(\omega t + \theta)$	$I_m \angle(\theta - 90^o)$

Phasors

The differences between $v(t)$ and $\mathbf{V} = V_m \angle \phi$:

- $v(t)$ is instantaneous or time domain representation. $\mathbf{V}$ is the frequency or phasor domain representation.
- $v(t)$ is time-dependent whereas $\mathbf{V}$ is not.
- $v(t)$ is always real with no complex term whereas $\mathbf{V}$ is generally complex.

Note: Phasor analysis applies only when frequency is constant. It applies in manipulating two or more sinusoidal signals only if they are of the same frequency.

Phasors: Example 1

Transform the following sinusoids to phasors:

a) $i(t) = 6\cos(50t - 40^o)$ A **b)** $v(t) = -4\sin(30t + 50^o)$ V

a)

$$I_m \cos(\omega t + \theta) \longrightarrow I_m \angle\theta$$

$$i(t) = 6\cos(50t - 40^o)\ \text{A} \longrightarrow \mathbf{I} = 6\angle -40^\circ\ \text{A}$$

Phasors: Example 1

b)

$$-\sin A = \sin(A + 180^o)$$

$$-\sin A = \cos(A + 180^o - 90^o)$$

$$v(t) = -4\sin(30t + 50^o)\ \text{V}$$

$$v(t) = 4\cos(30t + 50^o + 90^o)$$

$$v(t) = 4\cos(30t + 140^o)$$

$$V_m \cos(\omega t + \phi)$$

$$V_m \angle\phi$$

$$v(t) = 4\cos(30t + 140^o)$$

$$\mathbf{V} = 4\angle 140^o\ \text{V}$$

Phasors: Example 2

Find the sinusoids corresponding to phasors:

a) $\mathbf{V} = -10\angle 30^o \text{ V}$ **b)** $\mathbf{I} = j(5 - j12) \text{ A}$

a)

$V_m \cos(\omega t + \phi)$ ← $V_m \angle \phi$

$v(t) = -10\cos(\omega t + 30^o) \text{ V}$ ← $\mathbf{V} = -10\angle 30^o \text{ V}$

$v(t) = 10\cos(\omega t + 30^o + 180^o) \text{ V}$

$v(t) = 10\cos(\omega t + 210^o) \text{ V}$

Phasors: Example 2

b)

$$\mathbf{I} = j(5 - j12)\ \text{A}$$

$$\mathbf{I} = 12 + j5$$

$$\mathbf{I} = \sqrt{12^2 + 5^2}\ \angle\ \tan^{-1}\left(\frac{5}{12}\right)$$

$$\mathbf{I} = 13\angle\ 22.62^\circ$$

$$I_m \cos(\omega t + \theta) \leftarrow I_m\ \angle\theta$$

$$\mathbf{I} = 13\angle\ 22.62^\circ$$

$$i(t) = 13\cos(\omega t + 22.62^\circ)\ \text{A}$$

Phasors: Example 3

Given $i_1(t) = 4\cos(\omega t + 30^o)\ \mathrm{A}$ **and** $i_2(t) = 5\sin(\omega t - 20^o)\ \mathrm{A}$, **find their sum.**

Phasors: Example 3

$$i_1(t) = 4\cos(\omega t + 30^o)\ \text{A}$$

$$\mathbf{I}_1 = 4\angle 30^o$$

$$i_2(t) = 5\sin(\omega t - 20^o)$$

$$i_2(t) = 5\cos(\omega t - 20^o - 90^o)$$

$$\mathbf{I}_2 = 5\angle -110^o$$

$$i = i_1 + i_2$$

$$\mathbf{I} = \mathbf{I}_1 + \mathbf{I}_2 = 4\angle 30^o + 5\angle -110^o$$

$$\mathbf{I} = 3.218\angle -56.97^o$$

$$i(t) = 3.218\cos(\omega t - 56.97^o)\ \text{A}$$

Phasors: Differential and Integral Operations in Phasor

From these equations

$$v(t) = \mathrm{Re}(\mathbf{V}e^{j\omega t})$$

$$\mathbf{V} = V_m e^{j\phi} = V_m \angle \phi$$

You get

$$v(t) = \mathrm{Re}(\mathbf{V}e^{j\omega t}) = V_m \cos(\omega t + \phi)$$

So that

$$\frac{dv(t)}{dt} = -\omega V_m \sin(\omega t + \phi) = \omega V_m \cos(\omega t + \phi + 90^o)$$
$$= \mathrm{Re}(\omega V_m e^{j\omega t} e^{j\phi} e^{j90^o}) = \mathrm{Re}(j\omega \mathbf{V} e^{j\omega t})$$

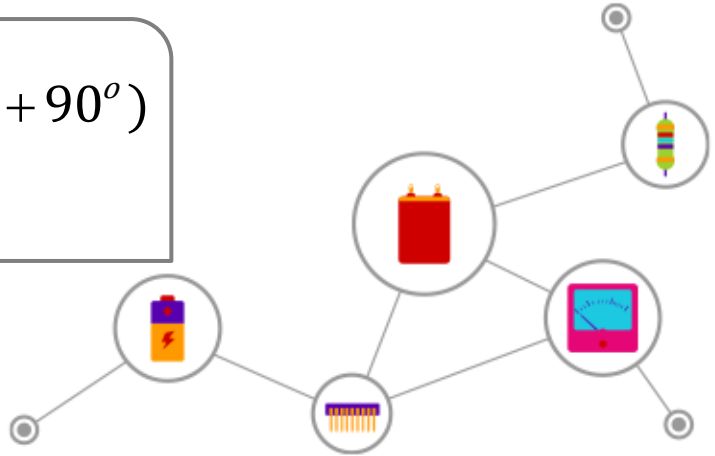

Phasors: Differential and Integral Operations in Phasor

Thus,

$$\frac{dv(t)}{dt} \Longleftrightarrow j\omega\mathbf{V}$$

Time Domain **Phasor Domain**

$$\mathbf{V} = V_m e^{j\phi}$$
$$= V_m \angle \phi$$

Phasors: Differential and Integral Operations in Phasor

Similarly,

$$\int v(t)\,dt \quad \Longleftrightarrow \quad \frac{\mathbf{V}}{j\omega}$$

Time Domain **Phasor Domain**

Differentiating a sinusoid is equivalent to **multiplying** its corresponding phasor by $j\omega$.

Integrating a sinusoid is equivalent to **dividing** its corresponding phasor by $j\omega$.

Phasors: Differential and Integral Operations in Phasor

Relationship between differential, integral operation in phasor listed as follows:

$v(t)$	$\Leftrightarrow$	$\mathbf{V} = V_m \angle \phi$
$\dfrac{dv(t)}{dt}$	$\Leftrightarrow$	$j\omega\mathbf{V}$
$\int v(t)dt$	$\Leftrightarrow$	$\dfrac{\mathbf{V}}{j\omega}$

Phasors

We can derive the differential equations for the following circuit in order to solve for $v_o(t)$ in phasor domain $\mathbf{V}_o$.

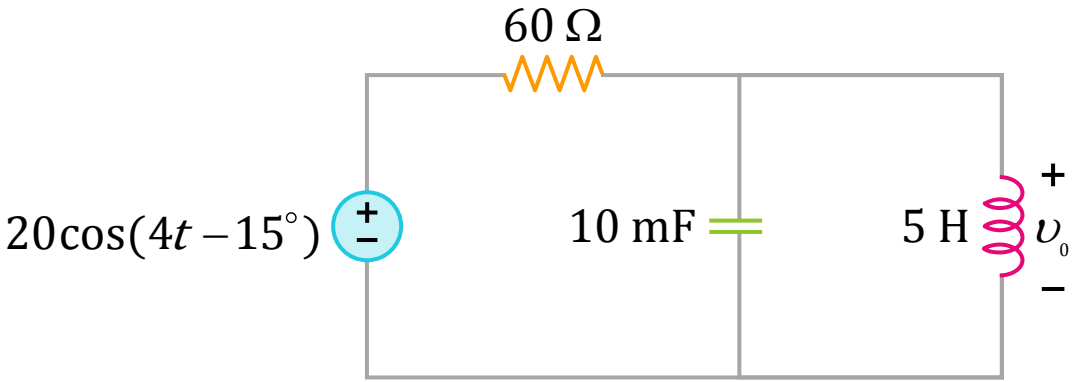

$$\frac{d^2 v_o}{dt^2} + \frac{5}{3}\frac{dv_o}{dt} + 20v_o = -\frac{400}{3}\sin(4t - 15^o)$$

Are there any quicker and more systematic methods to do it?

However, the derivation may sometimes be very tedious.

Phasors

The answer is YES!

Instead of first deriving the differential equation and then transforming it into phasor to solve for V_o, we can **transform all the RLC components into phasors first**.

Then, we apply the Kirchhoff's laws and other theorems to set up phasor equations involving V_o directly.

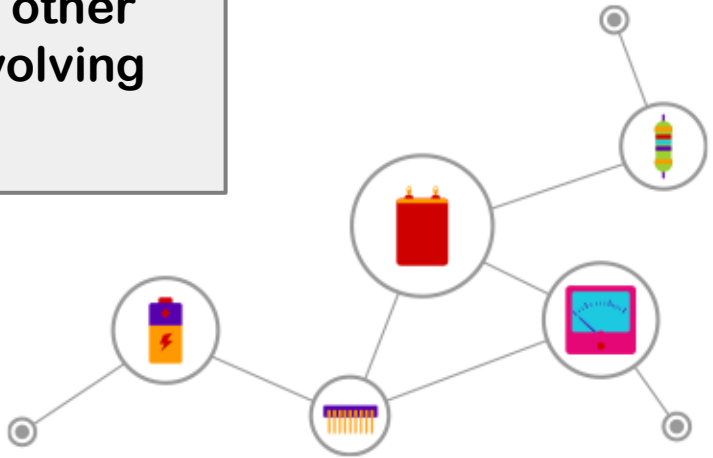

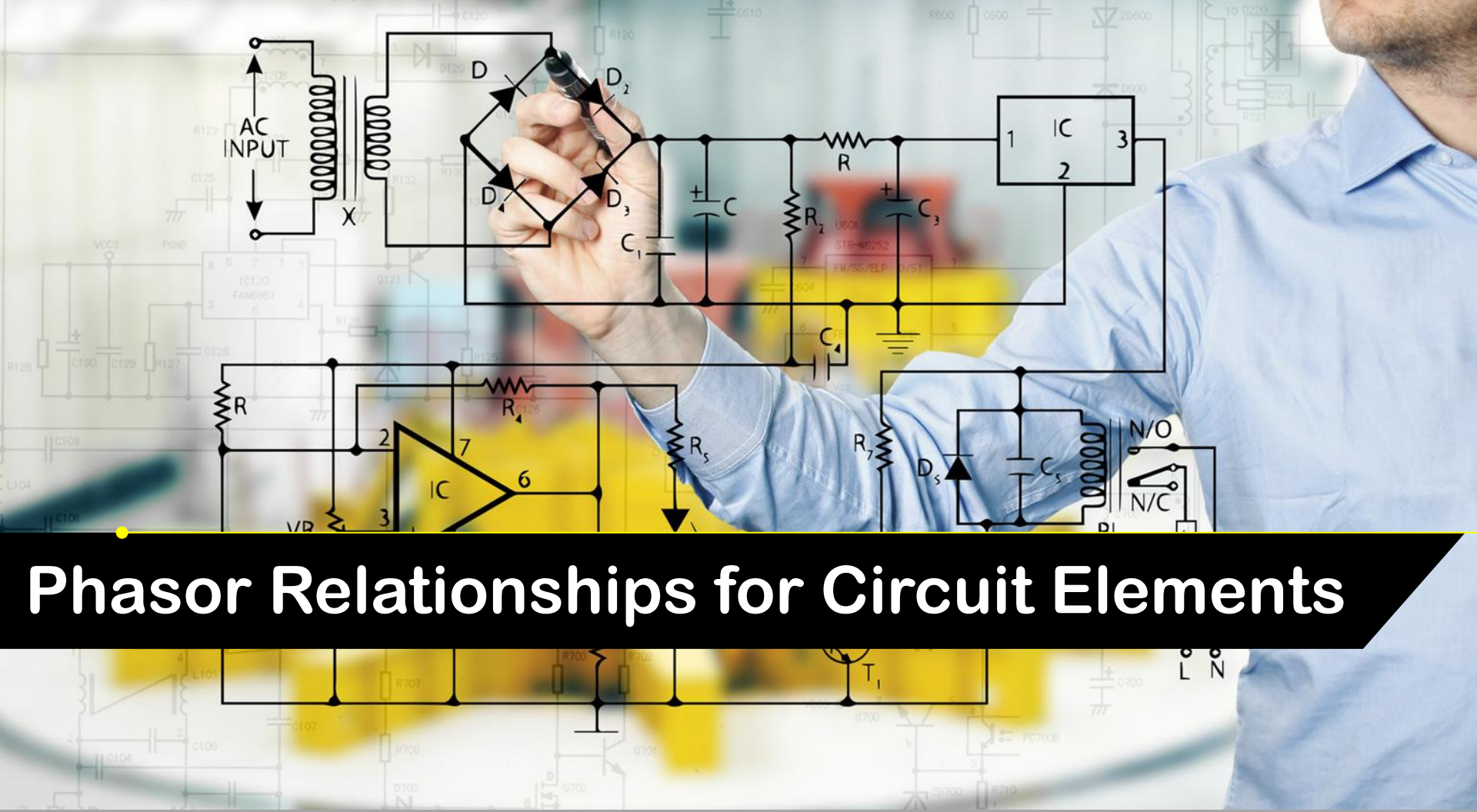

Phasor Relationships for Circuit Elements

Phasor Relationships for Circuit Elements

Let

$$i(t) = I_m \cos(\omega t + \phi) \rightarrow \mathbf{I} = I_m \angle \phi$$

Phasor Form

$$v(t) = i(t)R = RI_m \cos(\omega t + \phi) \rightarrow \mathbf{V} = RI_m \angle \phi = R\mathbf{I}$$

Phasor Form

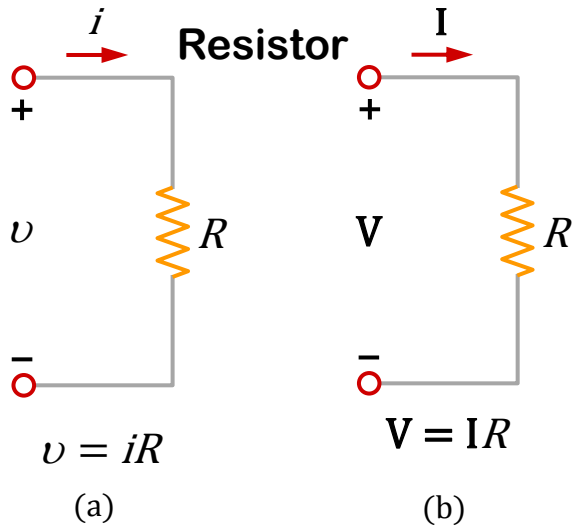

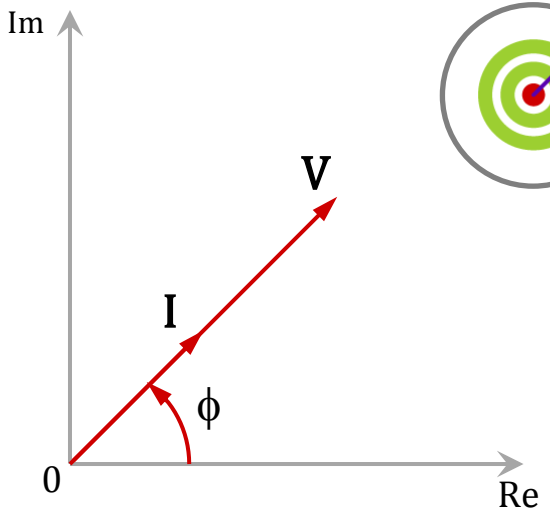

Voltage and current through a resistor are in phase as shown in the phasor diagram.

Phasor Relationships for Circuit Elements

Let

$$i(t) = I_m \cos(\omega t + \phi) \rightarrow \mathbf{I} = I_m \angle \phi$$

Phasor Form

$$v(t) = L\frac{di(t)}{dt} = -\omega L I_m \sin(\omega t + \phi) = \omega L I_m \cos(\omega t + \phi + 90^o) \rightarrow \mathbf{V} = \omega L I_m \angle(\phi + 90^o) = j\omega L \mathbf{I}$$

Phasor Form

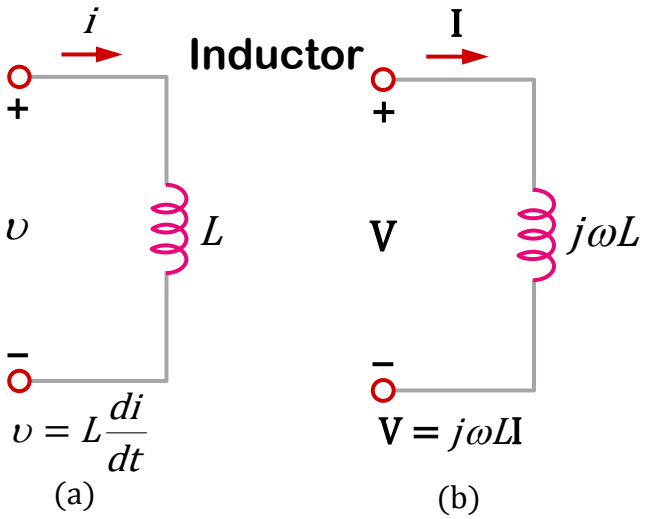

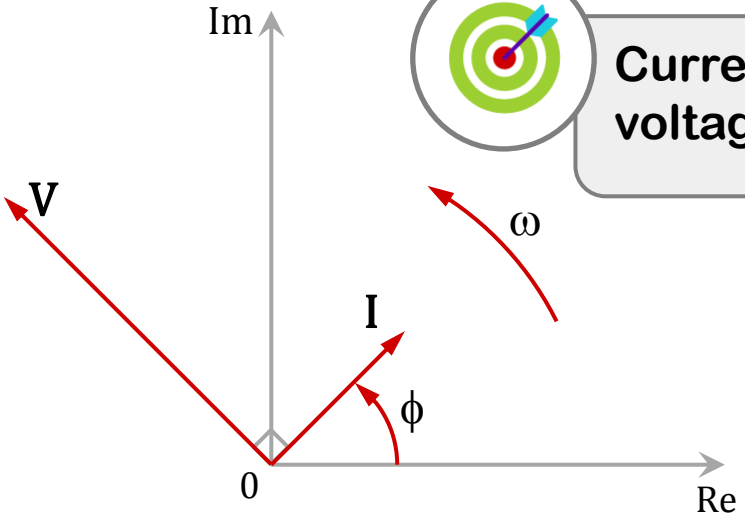

Current LAGS voltage by 90°.

Phasor Relationships for Circuit Elements

Let

$$v(t) = V_m \cos(\omega t + \phi) \Rightarrow \mathbf{V} = V_m \angle \phi$$

Phasor Form

$$i(t) = C\frac{dv(t)}{dt} \Rightarrow \mathbf{I} = j\omega C\mathbf{V} \Rightarrow \mathbf{V} = \frac{\mathbf{I}}{j\omega C} = -j\frac{\mathbf{I}}{\omega C}$$

Phasor Form

Capacitor

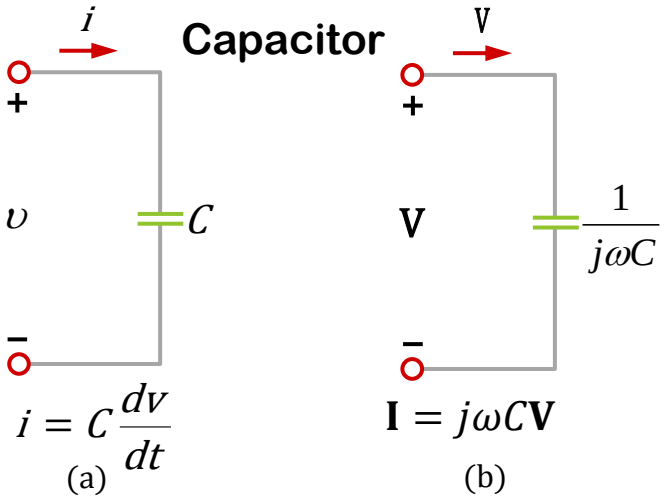

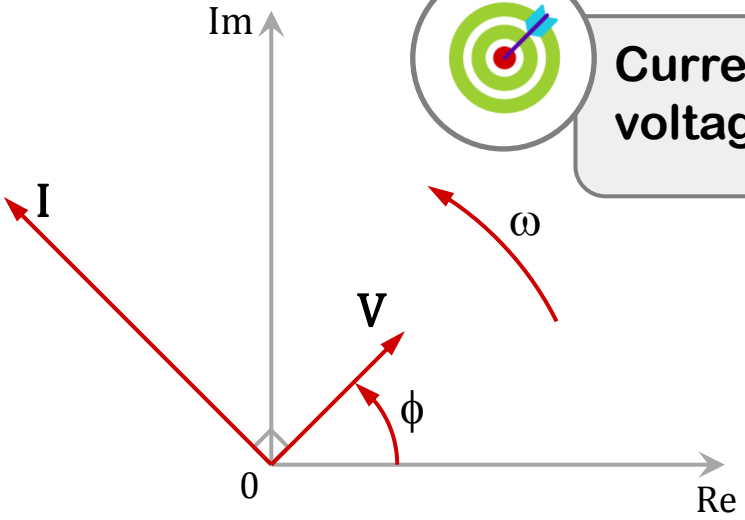

Current LEADS voltage by 90°.

Phasor Relationships for Circuit Elements

Summary of Voltage-Current Relationship		
Element	**Time Domain**	**Frequency Domain**
Resistor *(R)*	$v = Ri$	$\mathbf{V} = R\mathbf{I}$
Inductor *(L)*	$v = L\dfrac{di}{dt}$	$\mathbf{V} = j\omega L\mathbf{I}$
Capacitor *(C)*	$i = C\dfrac{dv}{dt}$	$\mathbf{V} = \dfrac{\mathbf{I}}{j\omega C}$

Phasor Relationships for Circuit Elements: Example 1

The voltage $v(t) = 12\cos(60t + 45^o)$ is applied to a $0.1\ \mathrm{H}$ inductor. Find the steady-state current through the inductor.

For the inductor

$$\mathbf{V} = j\omega L\mathbf{I}$$

$$\omega = 60\ \mathrm{rad/s}$$

$$\mathbf{V} = 12\angle 45^o\ \mathrm{V}$$

$$\mathbf{I} = \frac{\mathbf{V}}{j\omega L} = 2\angle -45^o\ \mathrm{A}$$

$$\mathbf{I} = 2\angle -45^o\ \mathrm{A} \Rightarrow i(t) = 2\cos(60t - 45^o)\ \mathrm{A}$$

Impedance and Admittance

Impedance and Admittance

The V-I relationships obtained for

$$\mathbf{V} = R\mathbf{I}$$

$$\mathbf{V} = j\omega L\mathbf{I}$$

$$\mathbf{V} = \frac{\mathbf{I}}{j\omega C}$$

Ohm's Law in Phasor Form

$$\mathbf{Z} = \frac{\mathbf{V}}{\mathbf{I}}, \quad \mathbf{V} = \mathbf{Z}\mathbf{I}$$

The impedance $\mathbf{Z}$ of a circuit is the ratio of the phasor voltage $\mathbf{V}$ to the phasor current $\mathbf{I}$, measured in ohms, Ω.

It represents the opposition that the circuit exhibits to the flow of the AC current.

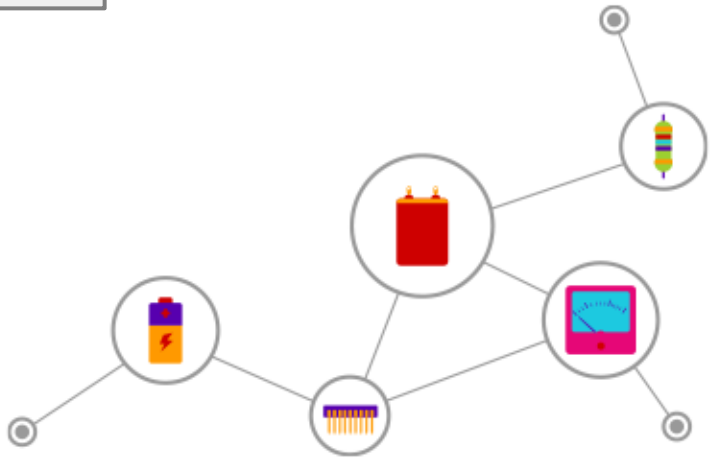

Impedance and Admittance

Impedance

The impedance $\mathbf{Z}$ in rectangular form

$$\mathbf{Z} = R + jX$$

R

$R = \mathrm{Re}\,(\mathbf{Z})$ is the resistance

X

$X = \mathrm{Im}\,(\mathbf{Z})$ is the reactance

Positive X: impedance is inductive or lagging

Negative X: impedance is capacitive or leading

Impedance and Admittance

Impedance

The impedance $\mathbf{Z}$ in polar form

$$\mathbf{Z} = |\mathbf{Z}| \angle \theta$$

$$\mathbf{Z} = R + jX = |\mathbf{Z}| \angle \theta$$

$$|\mathbf{Z}| = \sqrt{R^2 + X^2}, \quad \theta = \tan^{-1} \frac{X}{R}$$

$$R = |\mathbf{Z}| \cos\theta, \quad X = |\mathbf{Z}| \sin\theta$$

Impedance and Admittance

Admittance

The admittance $\mathbf{Y}$ is the reciprocal of impedance, measured in siemens (S) or mhos.

$$\mathbf{Y} = \frac{1}{\mathbf{Z}} = \frac{\mathbf{I}}{\mathbf{V}}$$

$$\mathbf{Y} = G + jB$$

G is the conductance

B is the susceptance

Impedance and Admittance

Impedances and Admittances of Passive Elements		
Element	**Impedance**	**Admittance**
Resistor *(R)*	$\mathbf{Z} = R$	$\mathbf{Y} = \frac{1}{R}$
Inductor *(L)*	$\mathbf{Z} = j\omega L$	$\mathbf{Y} = \frac{1}{j\omega C}$
Capacitor *(C)*	$\mathbf{Z} = \frac{1}{j\omega C}$	$\mathbf{Y} = j\omega C$

Impedance and Admittance

$$\mathbf{Z} = j\omega L$$

Short-circuit at DC

$$\omega = 0; \quad \mathbf{Z} = 0$$

Open-circuit at
High Frequencies

$$\omega \to \infty; \quad \mathbf{Z} \to \infty$$

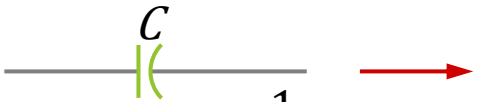

$$\mathbf{Z} = \frac{1}{j\omega C}$$

Open-circuit at DC

$$\omega = 0; \quad \mathbf{Z} \to \infty$$

Short-circuit at
High Frequencies

$$\omega \to \infty; \quad \mathbf{Z} = 0$$

Impedance and Admittance

After we know how to convert RLC components from time to phasor domain, we can transform a time domain circuit into a phasor/frequency domain circuit.

Hence, we can apply the Kirchhoff's laws and other circuit theorems to directly set up the necessary phasor equations.

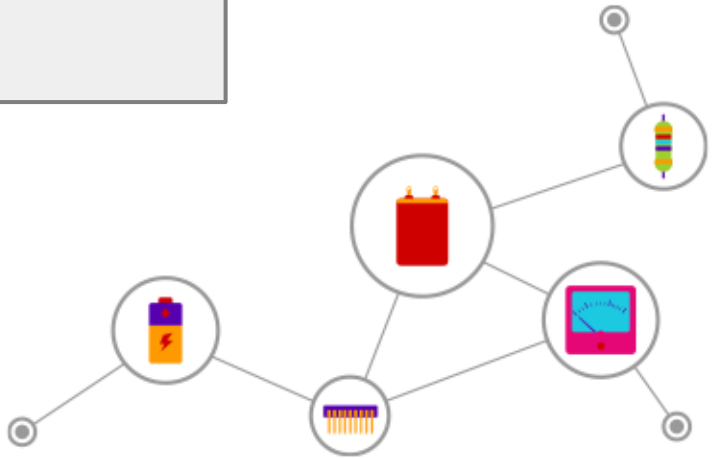

Impedance and Admittance: Example 1

Refer to the figure below, determine $v(t)$ and $i(t)$.

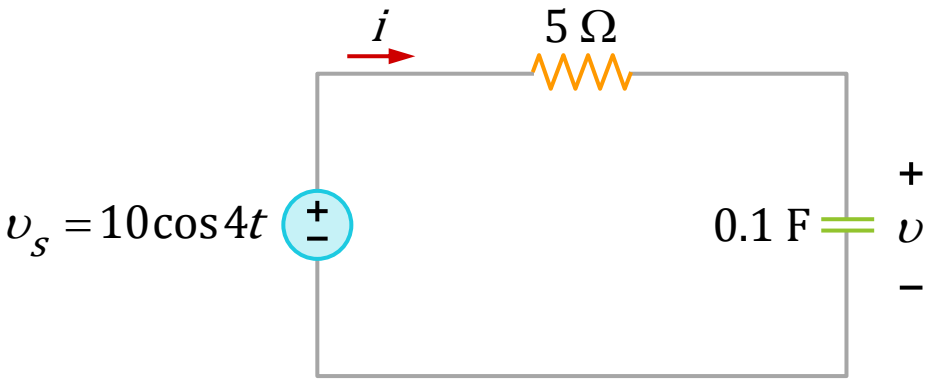

Impedance and Admittance: Example 1

$$\mathbf{V}_s = 10\angle 0^o \text{ V}$$

$$\omega = 4$$

$$\mathbf{Z} = 5 + \frac{1}{j\omega C} = 5 - j2.5\,\Omega$$

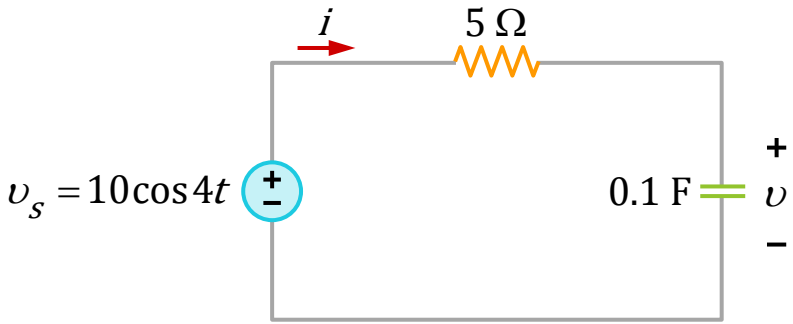

$$\mathbf{I} = \frac{\mathbf{V}_s}{\mathbf{Z}} = 1.6 + j0.8 = 1.789\angle 26.57^o$$

$$i(t) = 1.789\cos(4t + 26.57^o) \text{ A}$$

$$\mathbf{V} = \mathbf{I}\mathbf{Z}_C = \frac{\mathbf{I}}{j\omega C} = 4.47\angle -63.43^o$$

$$v(t) = 4.47\cos(4t - 63.43^o) \text{ V}$$

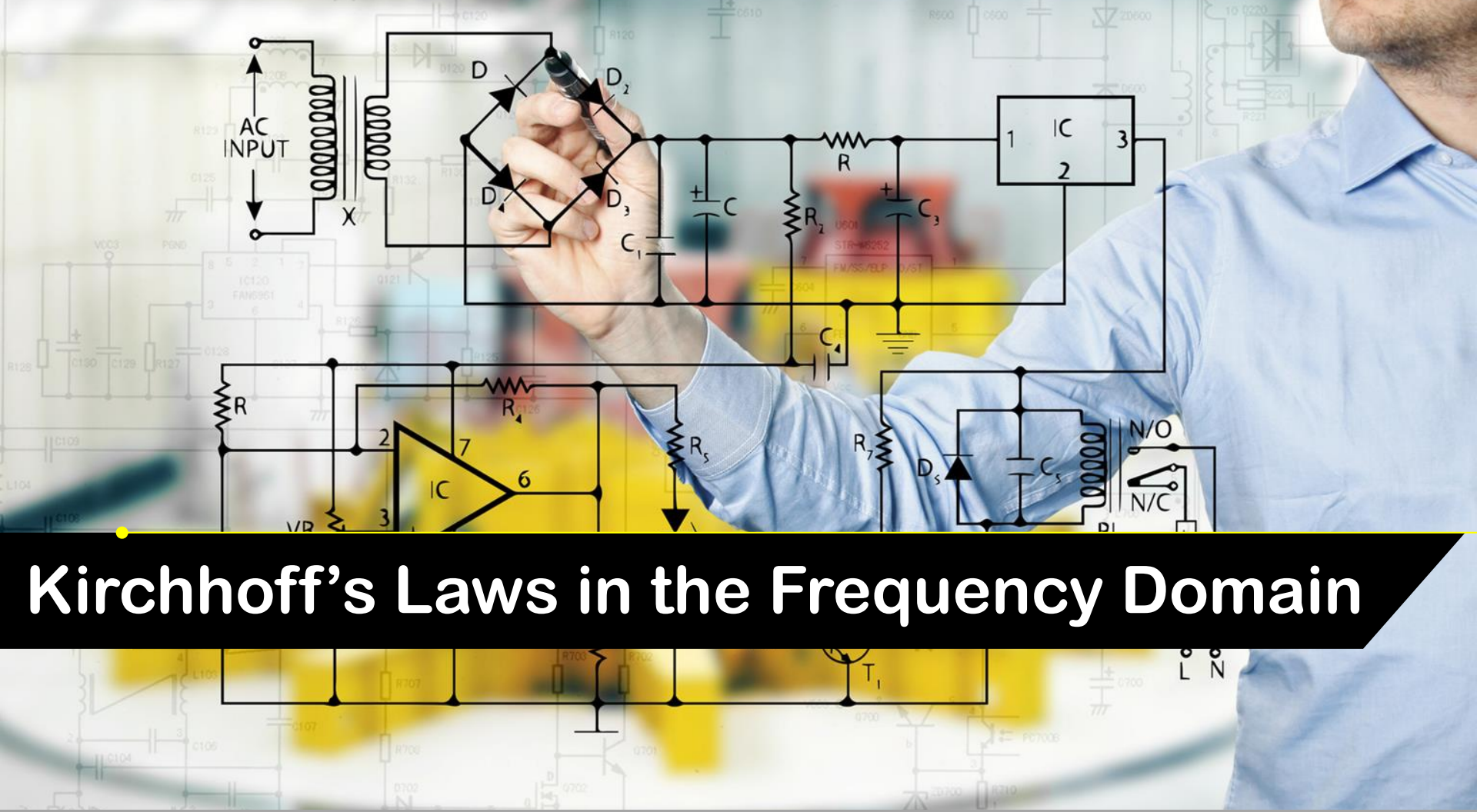

Kirchhoff's Laws in the Frequency Domain

Kirchhoff's Laws in the Frequency Domain

Both KVL and KCL are also valid in the phasor domain or more commonly called frequency domain.

Moreover, the variables to be handled are phasors, which are complex numbers.

All the mathematical operations involved are now in complex domain.

Kirchhoff's Laws in the Frequency Domain

KVL

For KVL around a closed loop

$$V_1 + V_2 + \ldots + V_n = 0$$

$$V_{m1}\cos(\omega t + \theta_1) + V_{m2}\cos(\omega t + \theta_2) + \ldots + V_{mn}\cos(\omega t + \theta_n) = 0$$

In phasor form

$$V_{m1}\angle\theta_1 + V_{m2}\angle\theta_2 + \ldots + V_{mn}\angle\theta_n = 0$$

Kirchhoff's Laws in the Frequency Domain

KCL

For KCL, algebraic sum of currents entering or leaving a node

$$i_1 + i_2 + \ldots + i_n = 0$$

$$I_{m1}\cos(\omega t + \theta_1) + I_{m2}\cos(\omega t + \theta_2) + \ldots + I_{mn}\cos(\omega t + \theta_n) = 0$$

In phasor form

$$I_{m1}\angle\theta_1 + I_{m2}\angle\theta_2 + \ldots + I_{mn}\angle\theta_n = 0$$

KVL and KCL hold in the frequency domain.

Impedance Combinations

Impedance Combinations

The same principles used for DC circuit analysis also apply to AC circuit analysis, e.g.,

- Impedance Equivalence
- Voltage Division
- Current Division
- $Y-\Delta$ / $\Delta-Y$ Transformations
- Circuit Reduction

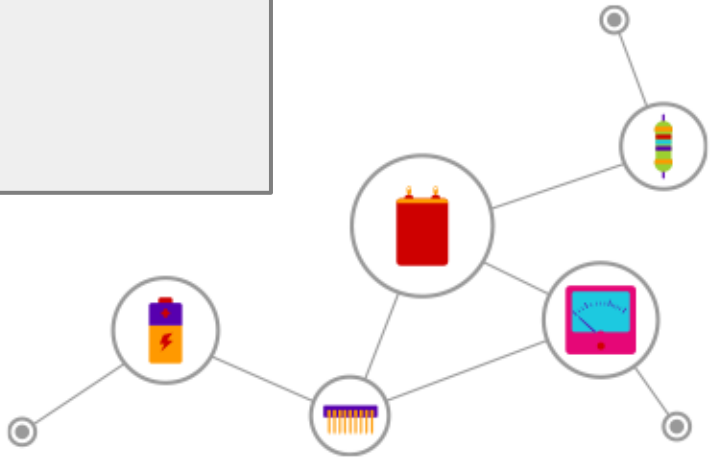

Impedance Combinations

Equivalent Impedance

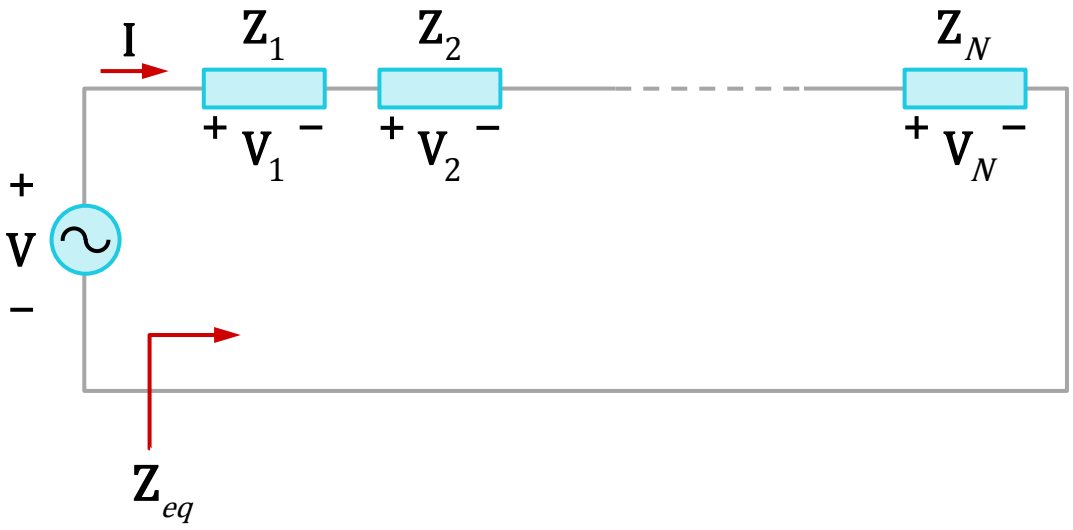

$$\mathbf{Z}_{eq} = \frac{\mathbf{V}}{\mathbf{I}} = \mathbf{Z}_1 + \mathbf{Z}_2 + \ldots + \mathbf{Z}_N$$

Impedance Combinations

Voltage Division

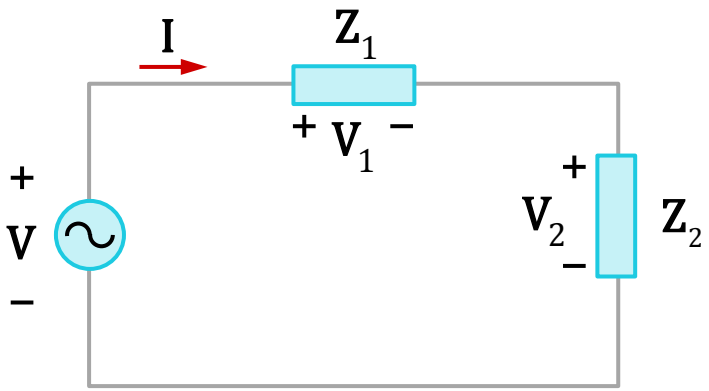

$$V_1 = \frac{Z_1}{Z_1 + Z_2} V$$

$$V_2 = \frac{Z_2}{Z_1 + Z_2} V$$

Impedance Combinations

Equivalent Admittance

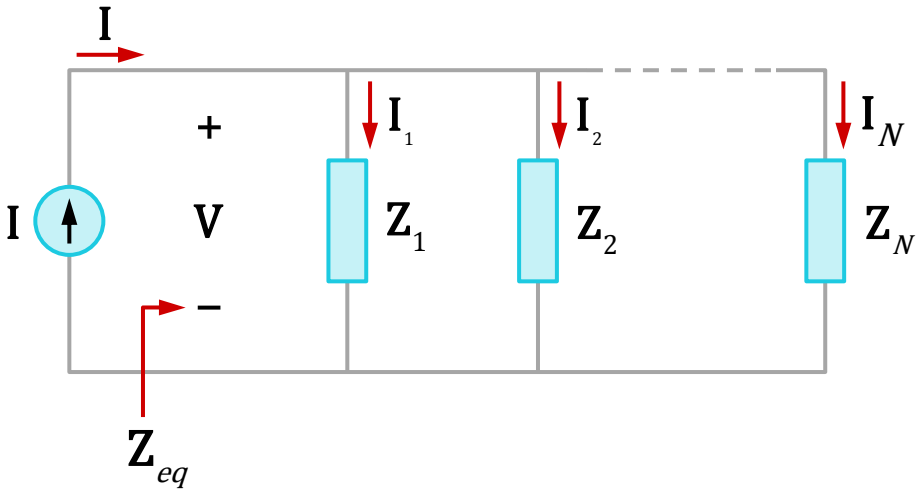

$$I = V\left(\frac{1}{Z_1} + \frac{1}{Z_2} + \ldots + \frac{1}{Z_N}\right)$$

$$Y_{eq} = \frac{I}{V} = Y_1 + Y_2 + \ldots + Y_N$$

Impedance Combinations

Parallel Connections and Current Divisions

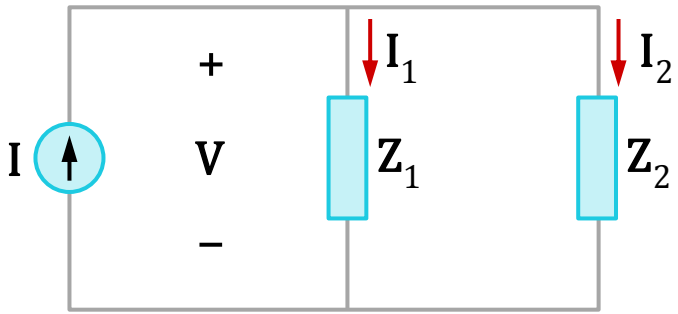

$$Z_{eq} = \frac{1}{Y_{eq}} = \frac{1}{Y_1 + Y_2} = \frac{1}{\frac{1}{Z_1} + \frac{1}{Z_2}} = \frac{Z_1 Z_2}{Z_1 + Z_2}$$

$$V = IZ_{eq} = I_1 Z_1 = I_2 Z_2$$

$$I_1 = \frac{Z_2}{Z_1 + Z_2} I$$

$$I_2 = \frac{Z_1}{Z_1 + Z_2} I$$

Impedance Combinations

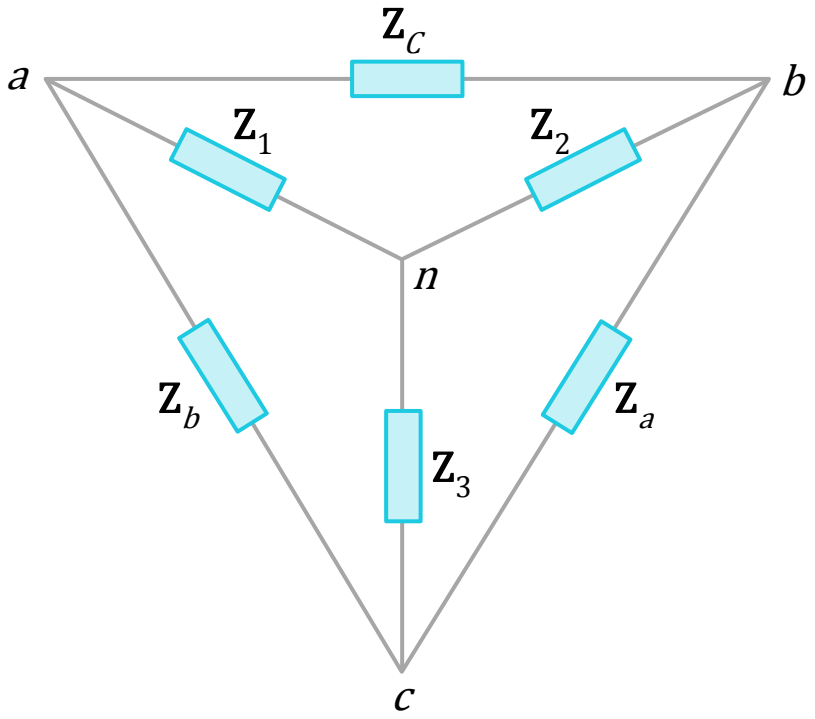

Y to Δ

$$Z_a = \frac{Z_1Z_2 + Z_2Z_3 + Z_3Z_1}{Z_1}$$

$$Z_b = \frac{Z_1Z_2 + Z_2Z_3 + Z_3Z_1}{Z_2}$$

$$Z_c = \frac{Z_1Z_2 + Z_2Z_3 + Z_3Z_1}{Z_3}$$

Impedance Combinations

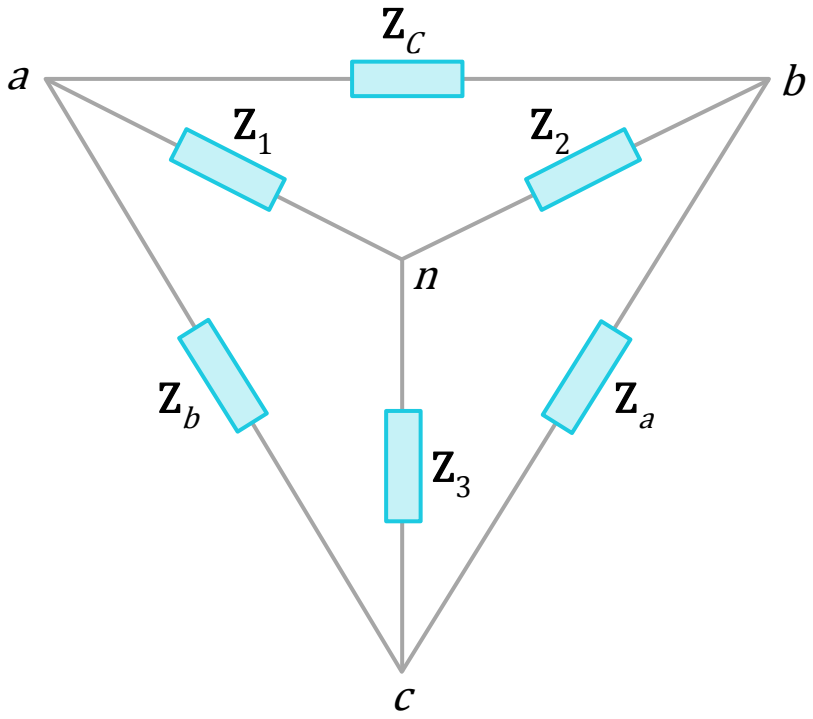

Δ to Y

$$Z_1 = \frac{Z_b Z_c}{Z_a + Z_b + Z_c}$$

$$Z_2 = \frac{Z_c Z_a}{Z_a + Z_b + Z_c}$$

$$Z_3 = \frac{Z_a Z_b}{Z_a + Z_b + Z_c}$$

Impedance Combinations

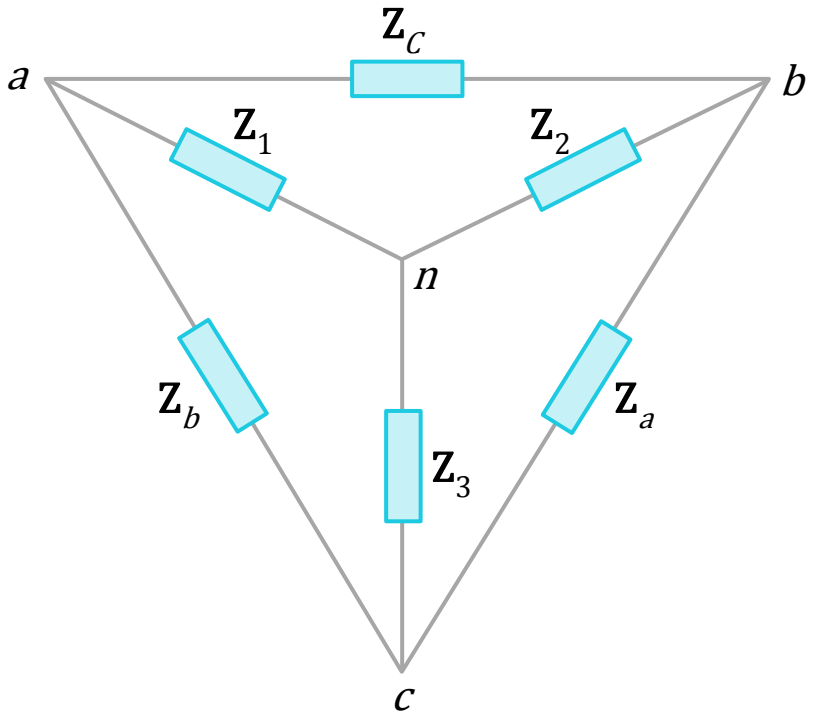

Balanced Case:

$$\mathbf{Z}_\Delta = \mathbf{Z}_a = \mathbf{Z}_b = \mathbf{Z}_c$$

$$\mathbf{Z}_Y = \mathbf{Z}_1 = \mathbf{Z}_2 = \mathbf{Z}_3$$

$$\mathbf{Z}_\Delta = 3\mathbf{Z}_Y; \quad \mathbf{Z}_Y = \frac{1}{3}\mathbf{Z}_\Delta$$

Impedance Combinations: Example 1

Determine the input impedance of the circuit when $\omega = 50$ rad/s.

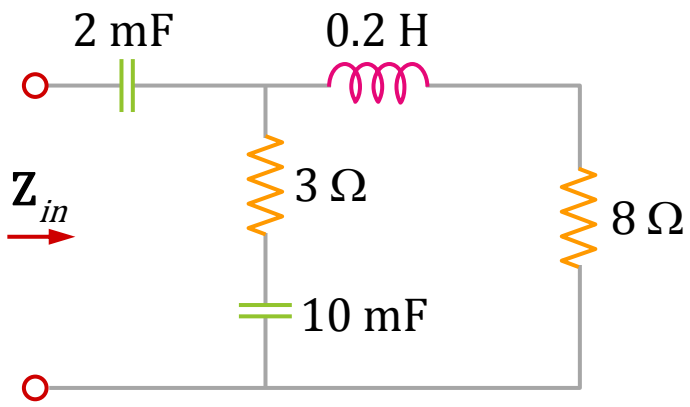

2-mF capacitor:

$$\mathbf{Z}_1 = \frac{1}{j\omega C} = -j10\,\Omega$$

3-ohm resistor series with 10-mF capacitor:

$$\mathbf{Z}_2 = 3 + \frac{1}{j\omega C} = 3 - j2\,\Omega$$

Impedance Combinations: Example 1

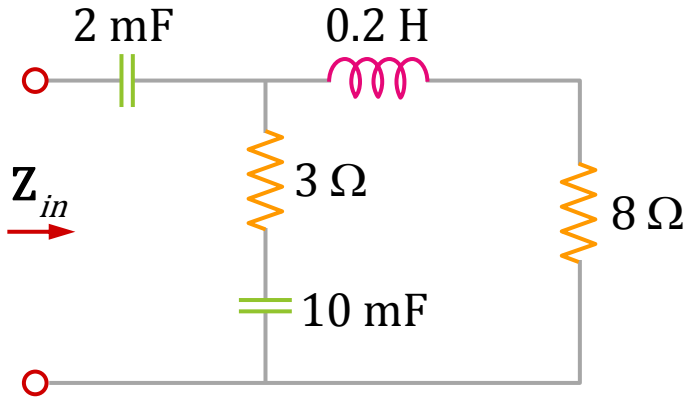

0.2-H inductor series with 8-ohm resistor:

$$\mathbf{Z}_3 = 8 + j\omega L = 8 + j10\,\Omega$$

$$\mathbf{Z}_{in} = \mathbf{Z}_1 + \left(\mathbf{Z}_2 \parallel \mathbf{Z}_3\right) = 3.22 - j11.07\,\Omega$$

Impedance Combinations: Example 2

Determine $v_o(t)$ **with** $\omega = 4$ rad/s.

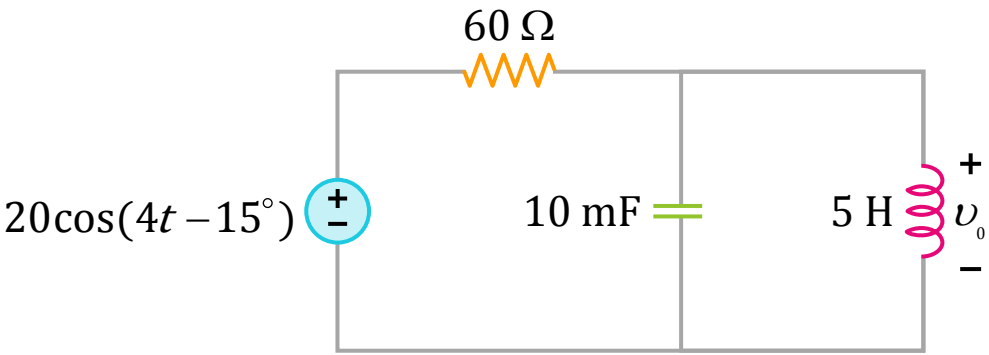

Impedance Combinations: Example 2

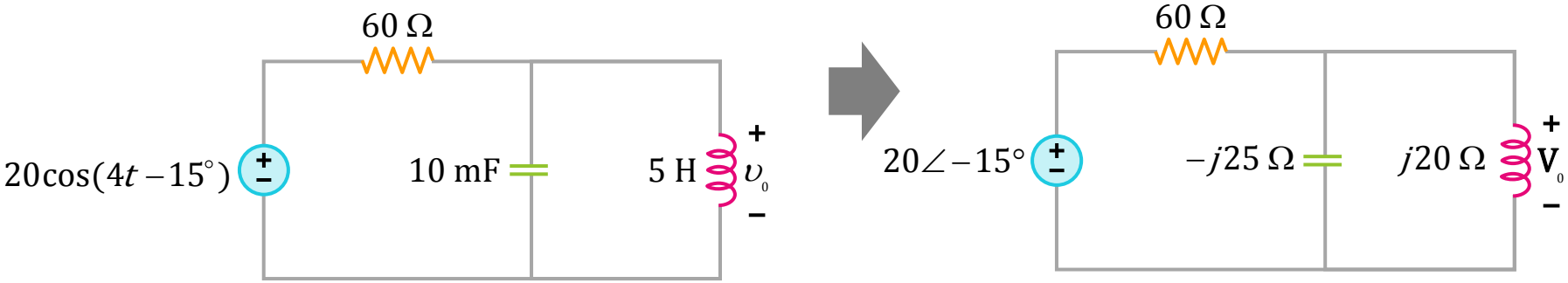

Let $\mathbf{Z}_1 = -j25 \,||\, j20 = j100\ \Omega$

Then, by voltage-division principle $\mathbf{V}_o = \dfrac{\mathbf{Z}_1}{60+\mathbf{Z}_1}\left(20\angle(-15^o)\right) = 17.15\angle(15.96^o)$

Converting this to time domain $v_o(t) = 17.15\cos(4t + 15.96^o)\,\mathrm{V}$

Impedance Combinations: Example 3

Determine $\mathbf{I}$.

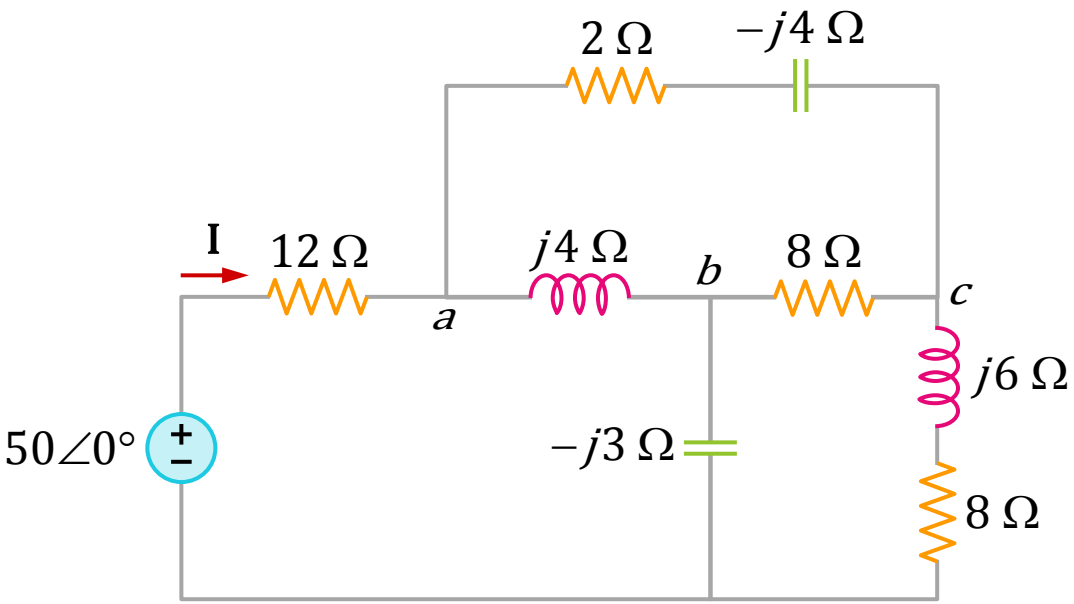

Impedance Combinations: Example 3

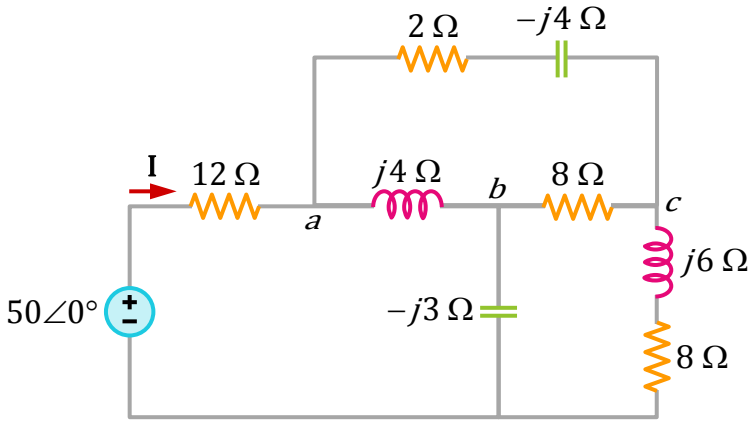

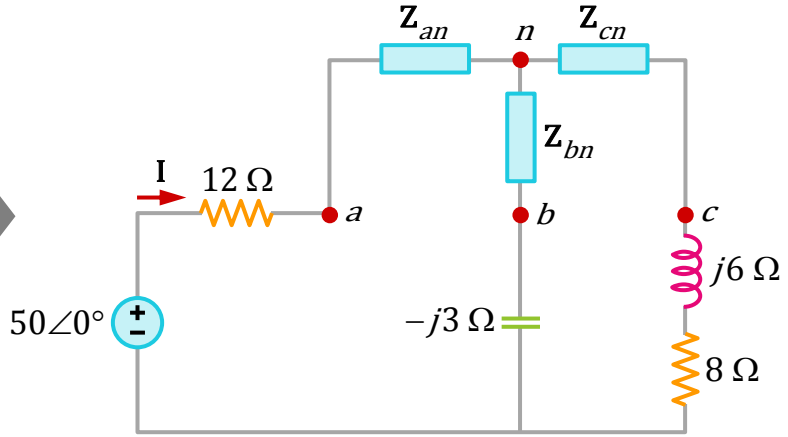

$$\mathbf{Z}_{an} = \frac{j4(2-j4)}{j4+2-j4+8} = (1.6+j0.8)\ \Omega$$

$$\mathbf{Z}_{bn} = \frac{j4(8)}{10} = j3.2\ \Omega$$

$$\mathbf{Z}_{cn} = \frac{8(2-j4)}{10} = (1.6-j3.2)\Omega$$

After Δ-Y transformation

$$\mathbf{Z} = 12 + \mathbf{Z}_{an} + (\mathbf{Z}_{bn} - j3) \| (\mathbf{Z}_{cn} + j6 + 8) = 13.64\angle 4.204^o\ \Omega$$

$$\mathbf{I} = \frac{\mathbf{V}}{\mathbf{Z}} = \frac{50\angle 0^o}{13.64\angle 4.204^o} = 3.666\angle -4.204^o\ \text{A}$$

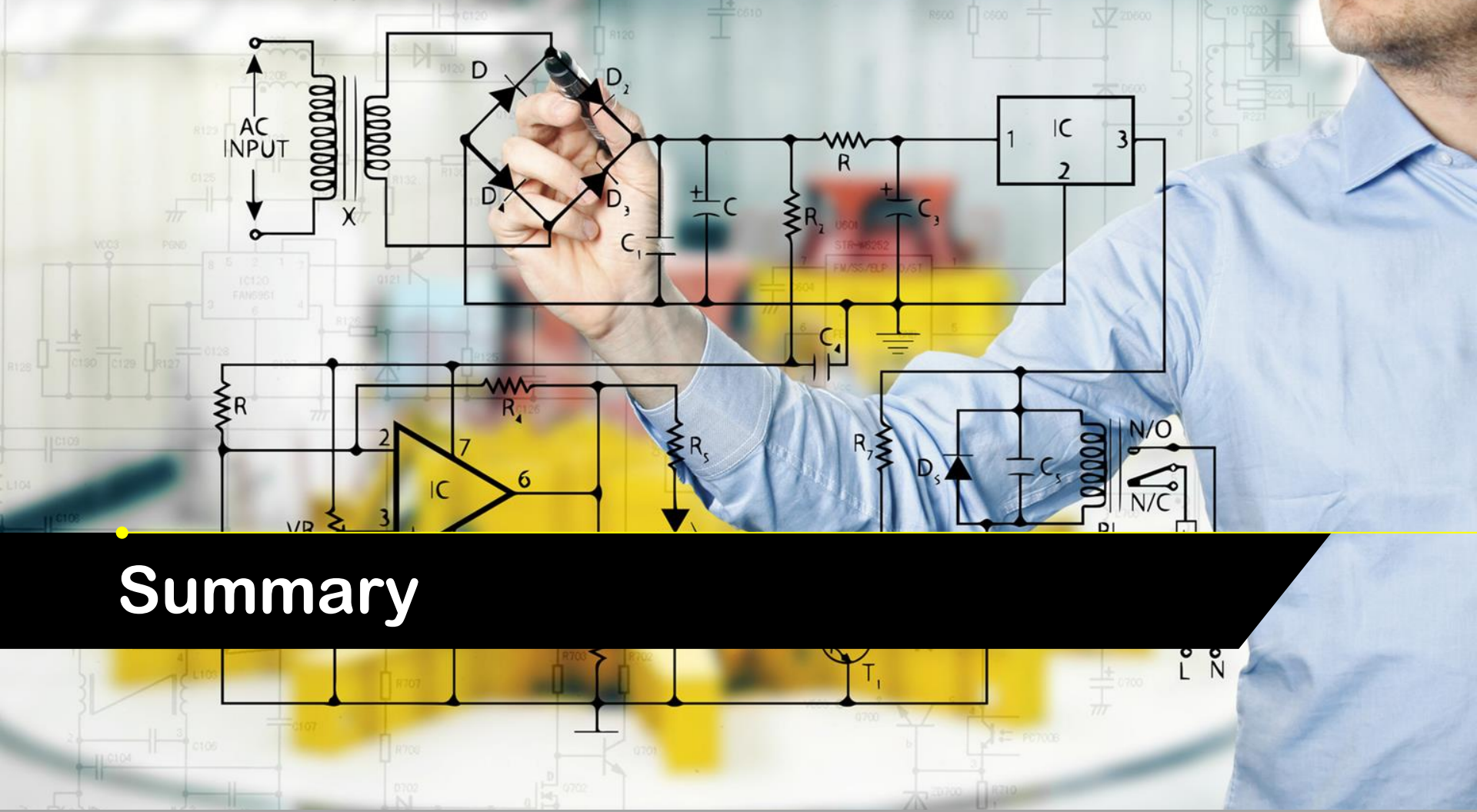
AC
INPUT
X
D
D2
D4
D3
C1
C
R2
R
C3
IC
1
2
3
C4
R
R4
2
7
IC
6
3
R5
R7
D5
C5
N/O
N/C
T1
L
N

Summary

Summary

- A sinusoid is a signal that has the form of the sine or cosine function. It has the general form

$$v(t) = V_m \cos(\omega t + \phi)$$

- A phasor is a complex quantity that represents both the magnitude and the phase of a sinusoid. The phasor $\mathbf{V}$ for the above sinusoid is

$$\mathbf{V} = V_m \angle \phi$$

- In AC circuits, voltage and current phasors always have a fixed relation to one another at any moment of time.

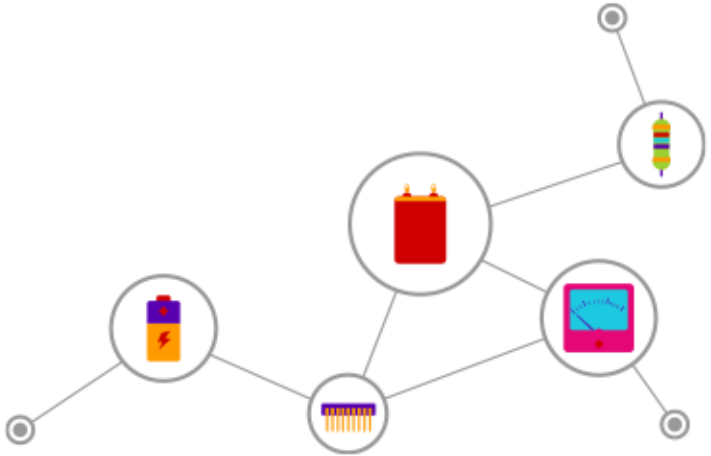

Summary

- If $v(t) = V_m \cos(\omega t + \phi_v)$ represents the voltage through an element, $i(t) = I_m \cos(\omega t + \phi_i)$ represents the current through the element, then,
  - $\phi_i = \phi_V$, if the element is a resistor
  - ϕ_i leads ϕ_V by 90°, if the element is a capacitor
  - ϕ_i lags ϕ_V by 90°, if the element is an inductor

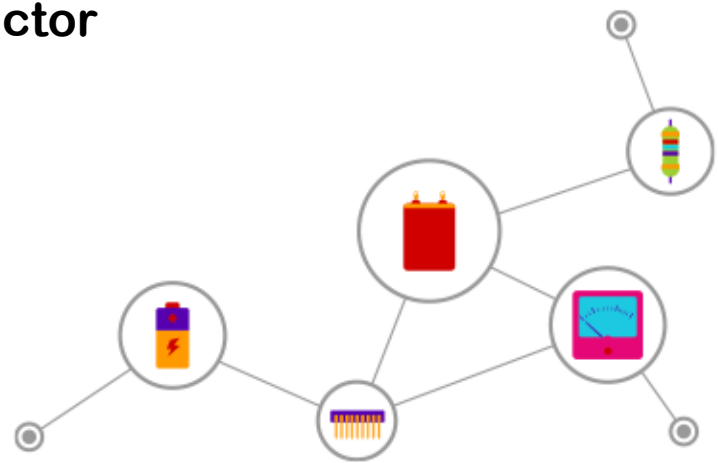

Summary

- The impedance $\mathbf{Z} = \frac{\mathbf{V}}{\mathbf{I}}$, the admittance $\mathbf{Y} = \frac{1}{\mathbf{Z}}$.
- Impedances in series add, while admittances in parallel add.
- For a/an:
  - Resistor $\mathbf{Z} = R$
  - Inductor $\mathbf{Z} = j\omega L$
  - Capacitor $\mathbf{Z} = \frac{1}{j\omega C}$

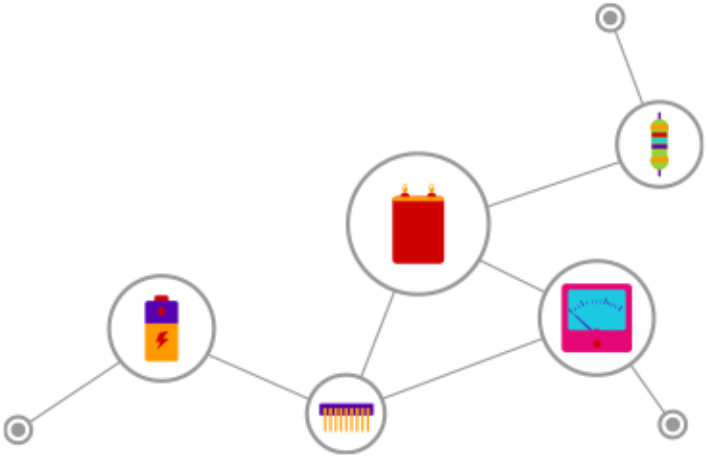

Summary

- Basic circuit laws (Ohm's and Kirchhoff's) apply to AC circuits in the same manner as they do for DC circuits

$$V = ZI$$

$$\sum I_k = 0 \quad \textbf{KCL}$$

$$\sum V_k = 0 \quad \textbf{KVL}$$
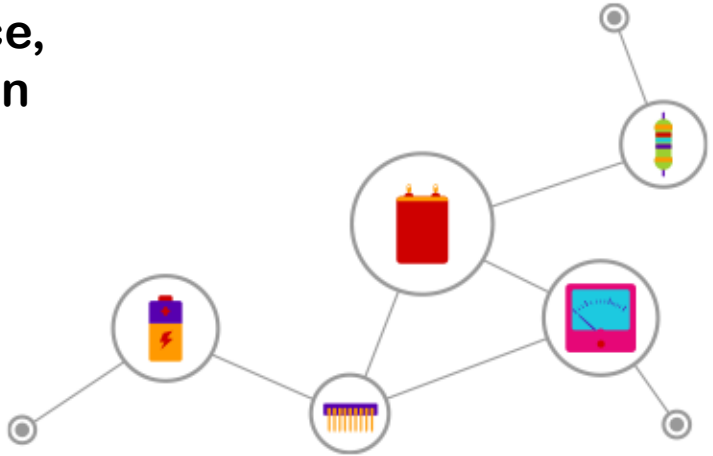
- The techniques of voltage/ current division, series/ parallel combination of impedance/ admittance, circuit reduction, and star-delta transformation apply to AC circuits analysis.